


# STREETFIGHTER

Spare parts catalogue part number: 915.1.289.1B

GENERAL INFORMATION

The present spare parts order exactly the right spare parts

When ordering specify:

1) the part's code number followed by its description; quantity needed;

2) the motorcycle's serial number, stamped on the steering head.

Reference to right and left apply to the vehicle in terms of its direction of move-ment.

Spare parts drawings are general and do not represent the part.

The contents of this catalogue are general and can undergo changes without prior notice.

VALIDITY

| | |
|---|---|
| f.m. | Until V.I.N. |
| d.m. | From V.I.N. |
| f.m.m. | Up to engine number |
| d.m.m. | From engine number |

LIST

| | |
|---|---|
| CAL | California |
| CDN | Canada |

*Ducati Motor Holding S.p.A.*
*Commercial and Administation Office:*
*Via A. Cavalieri Ducati n. 3*
*40132 Bologna, Italy*
*Telefono 051 6413111*
*Fax 051 406580*
*Internet www.ducati.com*

CATALOGUE No: 915.1.289.1B
ISSUED: 04 - 09

CATALOGUE No: 915.1.289.1B
ISSUED: 04 - 09



| Paint | Code |
|---|---|
| "Rosso Anniversary DUCATI" | (PPG) 473.101 |
| "Bianco Perla" | (LECHLER) L2909004 |
| "Smalto" | (PPG) *0040 |
| "Trasparente" | (PPG) 228.880 |


CATALOGUE No: 915.1.289.1B
ISSUED: 04 - 09

page Contents


| page | | |
|---|---|---|
| 4 | 001 | Workshop service tools |
| 6 | 001a | Workshop service tools |
| 8 | 001b | Workshop service tools |
| 10 | 001c | Dds tester |
| 12 | 001d | Workshop service tools |
| 14 | 002 | Gearchange control |
| 16 | 003 | Gearbox |
| 18 | 004 | Clutch |
| 20 | 005 | Clutch-side crankcase cover |
| 22 | 006 | Connecting rods |
| 24 | 007 | Cylinders - pistons |
| 26 | 008 | Timing system |
| 28 | 009 | Filters and oil pump |
| 30 | 010 | Crankcase halves |
| 32 | 010a | Crankcase halves |
| 34 | 011 | Water pump-altr-side crnkcse cover |
| 36 | 012 | Electric starting and ignition |
| 38 | 013 | Cylinder head : timing system |
| 40 | 014 | Vertical cylinder head |
| 42 | 015 | Horizontal cylinder head |
| 44 | 016 | Heat exchanger |
| 46 | 017 | Throttle body |
| 48 | 018 | Battery support |
| 50 | 018a | Electrical system |
| 52 | 019 | Exhaust system |
| 54 | 020 | Headlight & instr. panel |
| 56 | 021 | Handlebar and controls |
| 58 | 021a | Front forks |
| 60 | 022 | Frame |
| 62 | 022a | Stand |
| 64 | 023 | Clutch control |
| 66 | 024 | Front brake |
| 68 | 025 | Rear brake |
| 70 | 026 | Front and rear wheels |
| 72 | 026a | Rear wheel axle |
| 74 | 027 | Rear subframe |
| 76 | 027a | Number plate holder |
| 78 | 028 | Rear suspension |
| 80 | 028a | Swingarm |
| 82 | 029 | Air intake - oil breather |
| 84 | 030 | Radiator |
| 86 | 031 | Cooling system |
| 88 | 032 | Fuel tank |
| 90 | 032a | Fuel system |
| 92 | 033 | Seat |
| 94 | 034 | Half fairing |
| 96 | 035 | Evaporative emissions canister |
| 98 | 036 | Data plate positions |




CATALOGUE No: 915.1.289.1B
ISSUED: 04 - 09

DRAWING 001 Workshop service tools

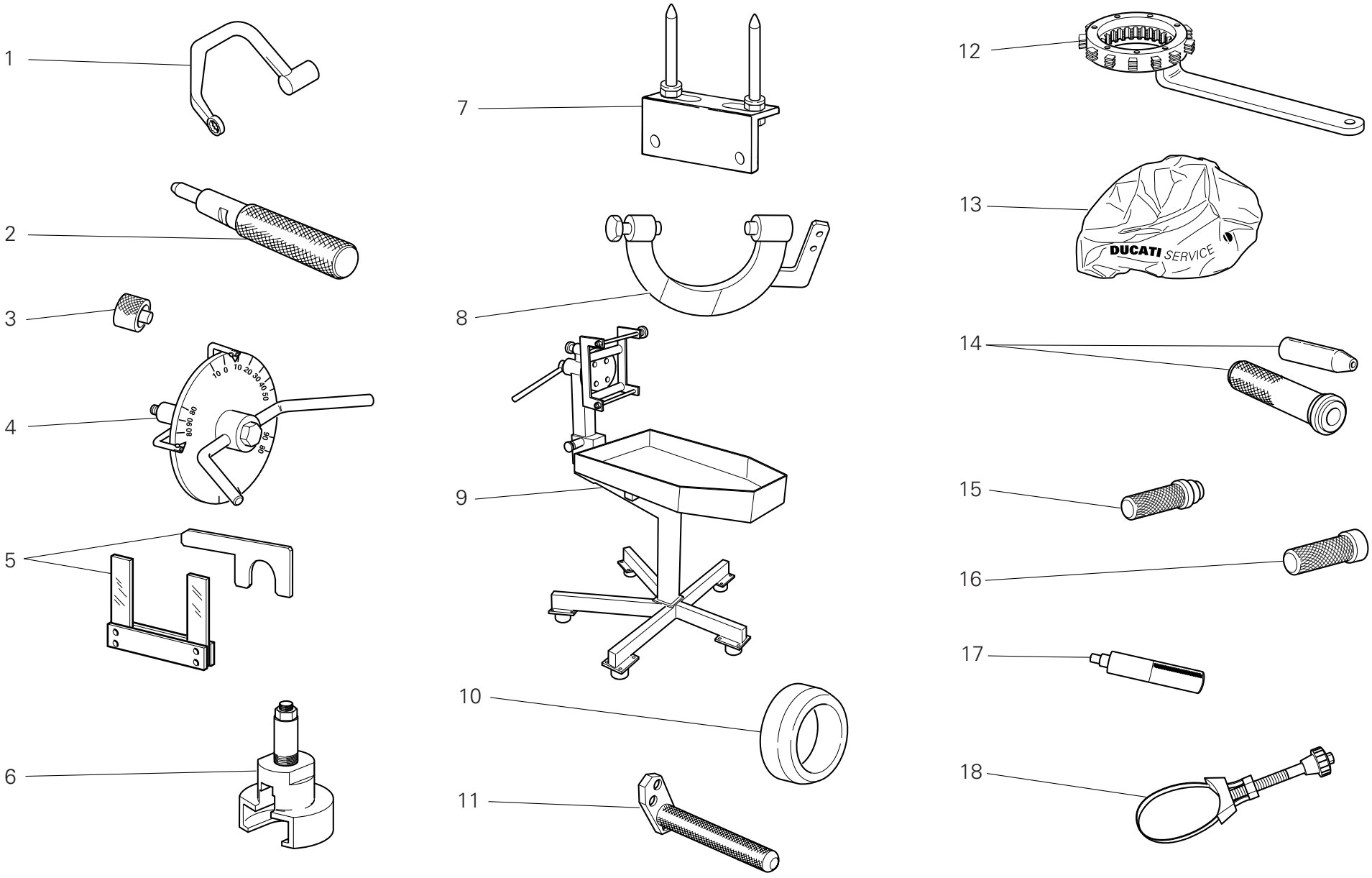

DRAWING 001 Workshop service tools

| NOTES NO. | CODE NO. | DESCRIPTION | VALIDITY | Q.TY |
|---|---|---|---|---|
| 1 | 88713.2676 | Head nuts holder wrench | | 1 |
| 2 | 88713.2442 | Tool to drive valve seal ring ø7 | | 1 |
| 3 | 88765.1298 | Spacer for checking lower valve shim | | 1 |
| 4 | 88713.0123 | Degree wheel holder tool for ignition advance check | | 1 |
| 5 | 88713.2878 | Spacer and fork feeler gauge 0,2/0,3 mm | | 1 |
| 6 | 88713.2092 | Extractor for primary drive gear | | 1 |
| 7 | 88713.2103 | Head mounting base | | 1 |
| 8 | 88713.2874 | Flywheel Wrench | | 1 |
| 9 | 88713.1832 | Bench for engine repair | | 1 |
| 10 | 88700.5665 | Sleeve for installing clutch bell gear | | 1 |
| 11 | 88713.2827 | Plate for positioning gear engagement fork | | 1 |
| 12 | 88713.2133 | Wrench to hold cluch housing drum steady | | 1 |
| 13 | 88713.1886 | Engine canvas | | 1 |
| 14 | 88700.5749 | Crankcases assembling cap | | 1 |
| 15 | 88713.0869 | Tool for assembling water pump front seal | | 1 |
| 16 | 88713.0870 | Tool for assembling water pump front seal | | 1 |
| 17 | 88713.2669 | Roller cage fitting tool on primary shaft | | 1 |
| 18 | 88713.2906 | Wrench to tighten oil filter cartridge | | 1 |

| NOTES NO. | CODE NO. | DESCRIPTION | VALIDITY | Q.TY |
|---|---|---|---|---|



CATALOGUE No: 915.1.289.1B
ISSUED: 04 - 09

DRAWING 001a Workshop service tools

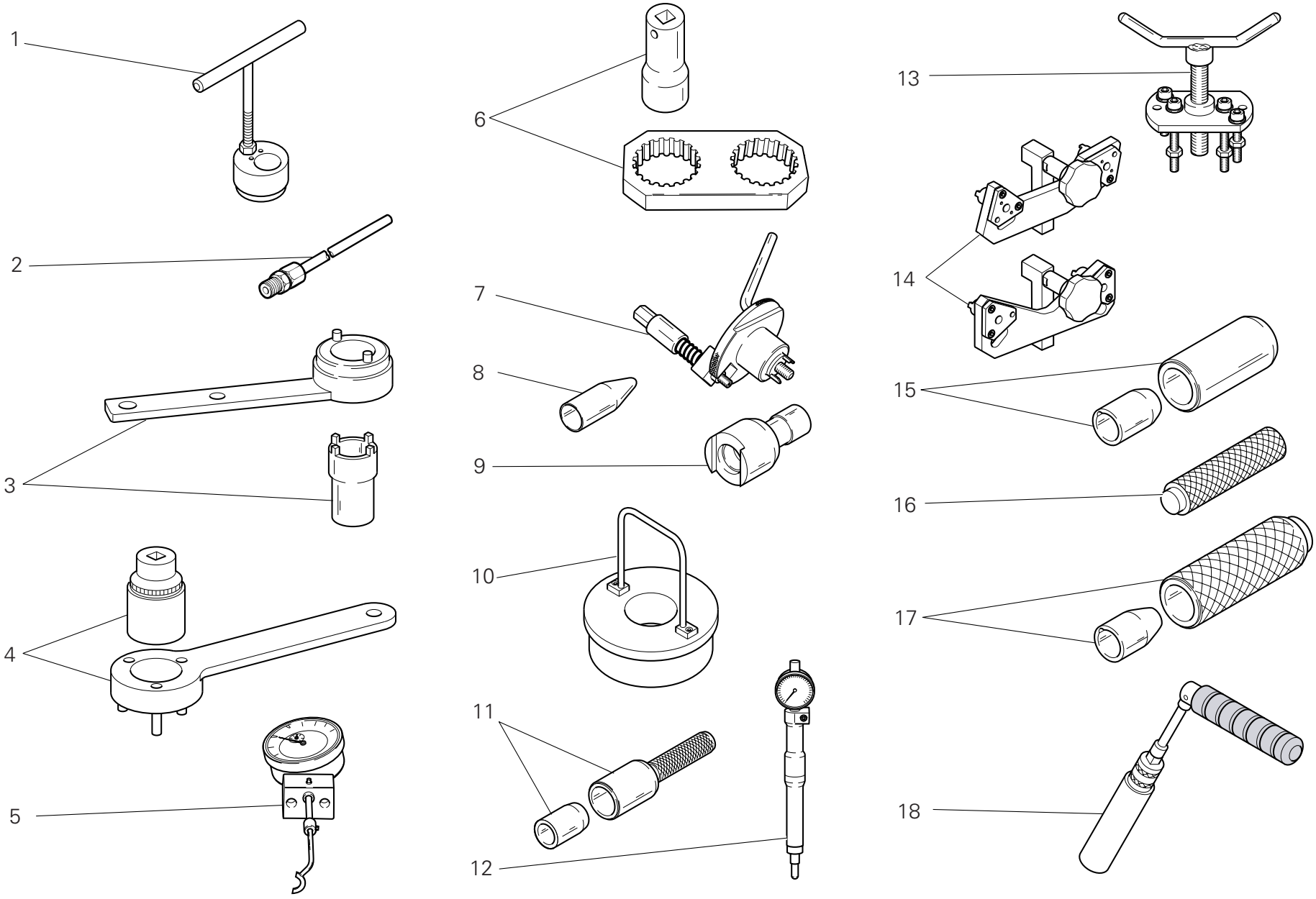

DRAWING 001a Workshop service tools

| NOTES NO. | CODE NO. | DESCRIPTION | VALIDITY | Q.TY |
|---|---|---|---|---|
| 1 | 88713.2832 | Wrench for tensioning mobile belt tensioner | | 1 |
| 2 | 88713.1010 | Union for exhaust gas suction | | 1 |
| 3 | 88713.1805 | Driving roller tightening tool | | 1 |
| 4 | 88713.2102 | Primary drive gear tightening tool | | 1 |
| 5 | 88765.1518 | Valve lift gauge | | 1 |
| 6 | 88713.1806 | Reaction tool for belt roller tightening | | 1 |
| 7 | 88713.2011 | Tool to hold crankshaft in TDC position | | 1 |
| 8 | 88713.1920 | Tool to fit O-rings onto stud bolts | | 1 |
| 9 | 88713.1821 | Wrench to tighten tensioning bolts | | 1 |
| 10 | 88713.2870 | Con-rod guiding tool | | 1 |
| 11 | 88713.2060 | Seal ring driving tool | | 1 |
| 12 | 88765.1188 | T.D.C. control gauge | | 1 |
| 13 | 88713.1749 | Drive roller puller | | 1 |
| 14 | 88765.1524 | Belt roller timing tool | | 1 |
| 15 | 88713.2861 | Tool to fit seals on camshafts | | 1 |
| 16 | 88713.1980 | Drift to drive retainers onto shafts | | 1 |
| 17 | 88713.2834 | Snap ring installation tool | | 1 |
| 18 | 88713.2877 | Spark plug tool | | 1 |

| NOTES NO. | CODE NO. | DESCRIPTION | VALIDITY | Q.TY |
|---|---|---|---|---|



CATALOGUE No: 915.1.289.1B
ISSUED: 04 - 09

DRAWING 001b Workshop service tools

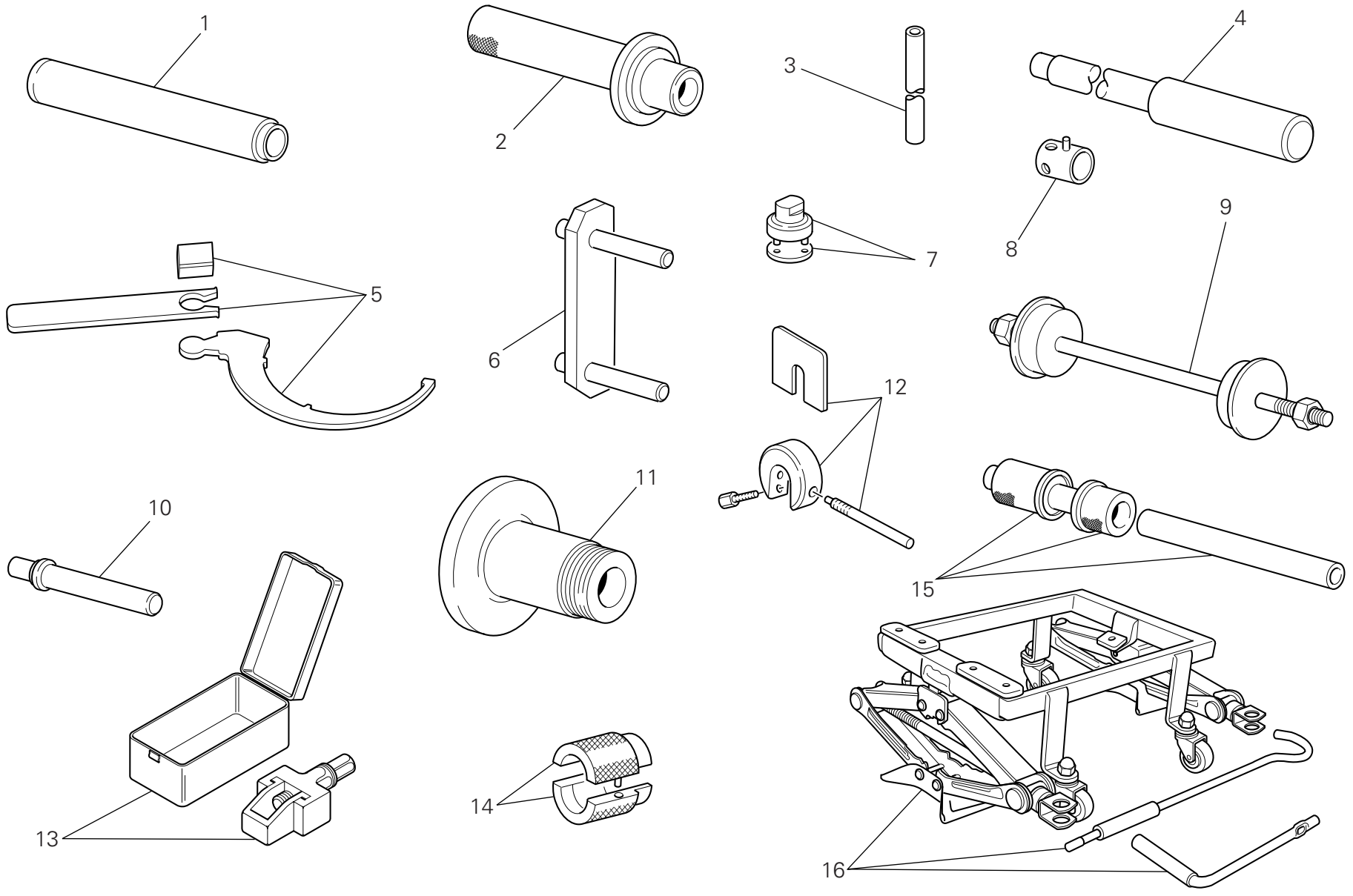

DRAWING 001b Workshop service tools

| NOTES NO. | CODE NO. | DESCRIPTION | VALIDITY | Q.TY |
|---|---|---|---|---|
| 1 | 88713.1072 | Stopper for driving the half bearing of the steering head base | | 1 |
| 2 | 88713.1068 | Stopper for assembling the rear fork roller bearings | | 1 |
| 3 | 88713.0958 | Draw bar for SHOWA forks overhauling | | 1 |
| 4 | 88713.1074 | Stopper for disassembling the swingarm pivot | | 1 |
| 5 | 88713.3211 | Wrench for adjusting the eccentric hub | | 1 |
| 6 | 88713.1515 | Frame/engine mount | | 1 |
| 7 | 88713.1058 | Wrench for assembling the steering head cap | | 1 |
| 8 | 8000.70139 | Wrench for front wheel spindle | | 1 |
| 9 | 88713.1062 | Tool for assembling the steering head bearings | | 1 |
| 10 | 88713.1071 | Stopper for assembling the rocker needle bearings | | 1 |
| 11 | 88713.2951 | Tool for balancing rear wheel | | 1 |
| 12 | 88713.0957 | Tool for holding SHOWA fork spacer | | 1 |
| 13 | 88713.2562 | Tool for assembling chain | | 1 |
| 14 | 88713.1096 | Tool for overhauling SHOWA forks - assembling seal ring | | 1 |
| 15 | 88713.2409 | Tool for assembling the swingarm ball bearings | | 1 |
| 16 | 88713.3220 | Bench for engine repair | | 1 |

| NOTES NO. | CODE NO. | DESCRIPTION | VALIDITY | Q.TY |
|---|---|---|---|---|



CATALOGUE No: 915.1.289.1B
ISSUED: 04 - 09

DRAWING 001c Dds tester

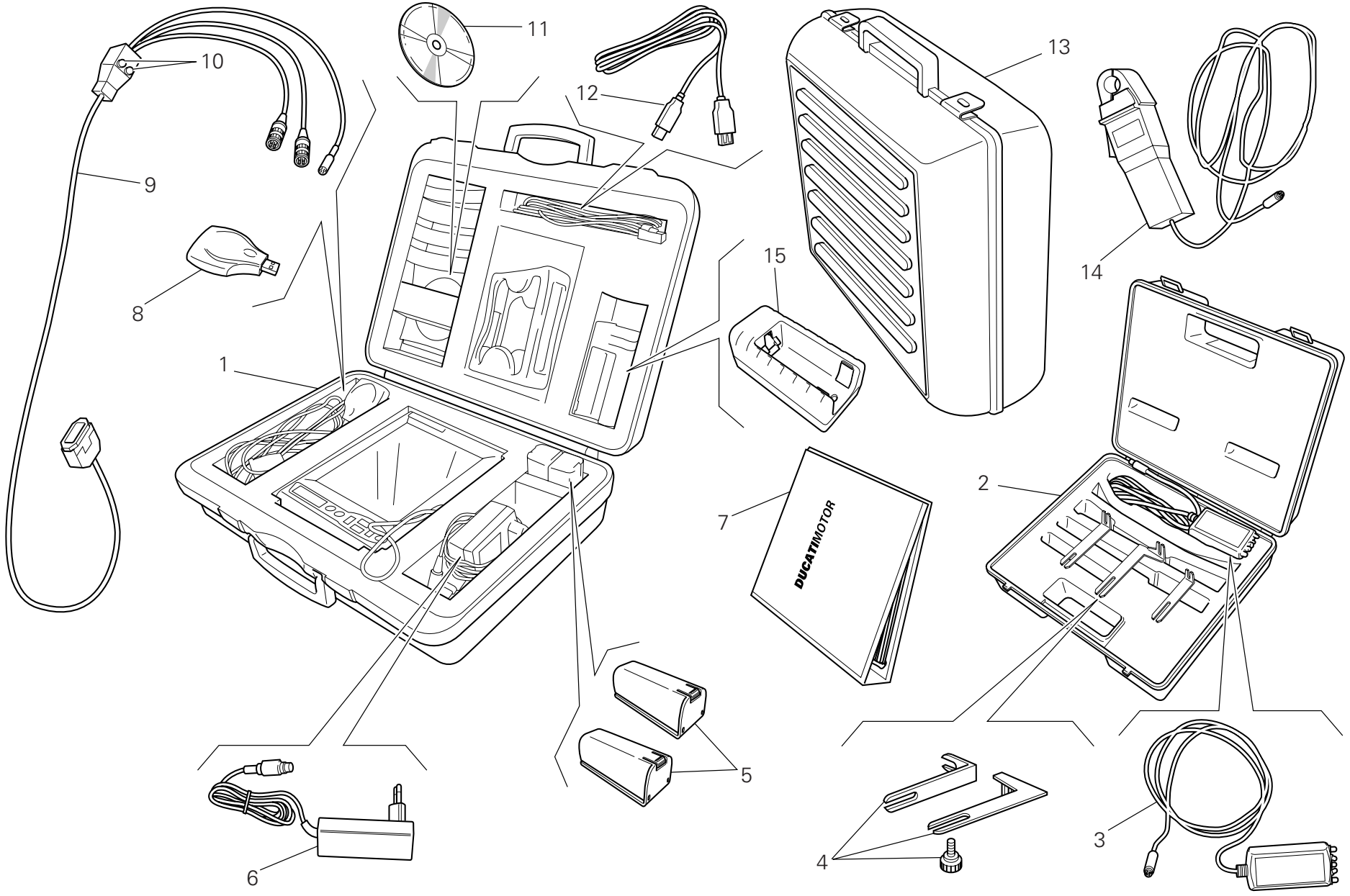

DRAWING 001c Dds tester

| NOTES NO. | CODE NO. | DESCRIPTION | VALIDITY | Q.TY |
|---|---|---|---|---|
| 1 | 97900.0215 | DDS (Ducati Diagnosis System) + manifold vacuum meter. kit | | 1 |
| 2 | 97900.0002 | Belt tensioning kit | | 1 |
| 3 | 88765.1371 | Sensor | | 1 |
| 4 | 88765.1374 | Bracket | | 1 |
| 5 | 97900.0216 | Battery | | 2 |
| 6 | 97900.0224 | Feeder | | 1 |
| 7 | 97900.0232 | DDS manual | | 1 |
| 8 | 97900.0225 | (USB) Memory card reader | | 1 |
| 9 | 97900.0222 | Main cable 1060838 | | 1 |
| 10 | 97900.0219 | Fuse | | 2 |
| 11 | 97900.0223 | Software DDS CD | | 1 |
| 12 | 97900.0226 | (USB) Cable extension | | 1 |
| 13 | 97900.0229 | Black case with sponge rubber | | 1 |
| 14 | 88765.1126V | Amperometer plier | | 1 |
| 15 | 97900.0217 | Battery charger | | 1 |

| NOTES NO. | CODE NO. | DESCRIPTION | VALIDITY | Q.TY |
|---|---|---|---|---|



CATALOGUE No: 915.1.289.1B
ISSUED: 04 - 09

DRAWING 001d Workshop service tools

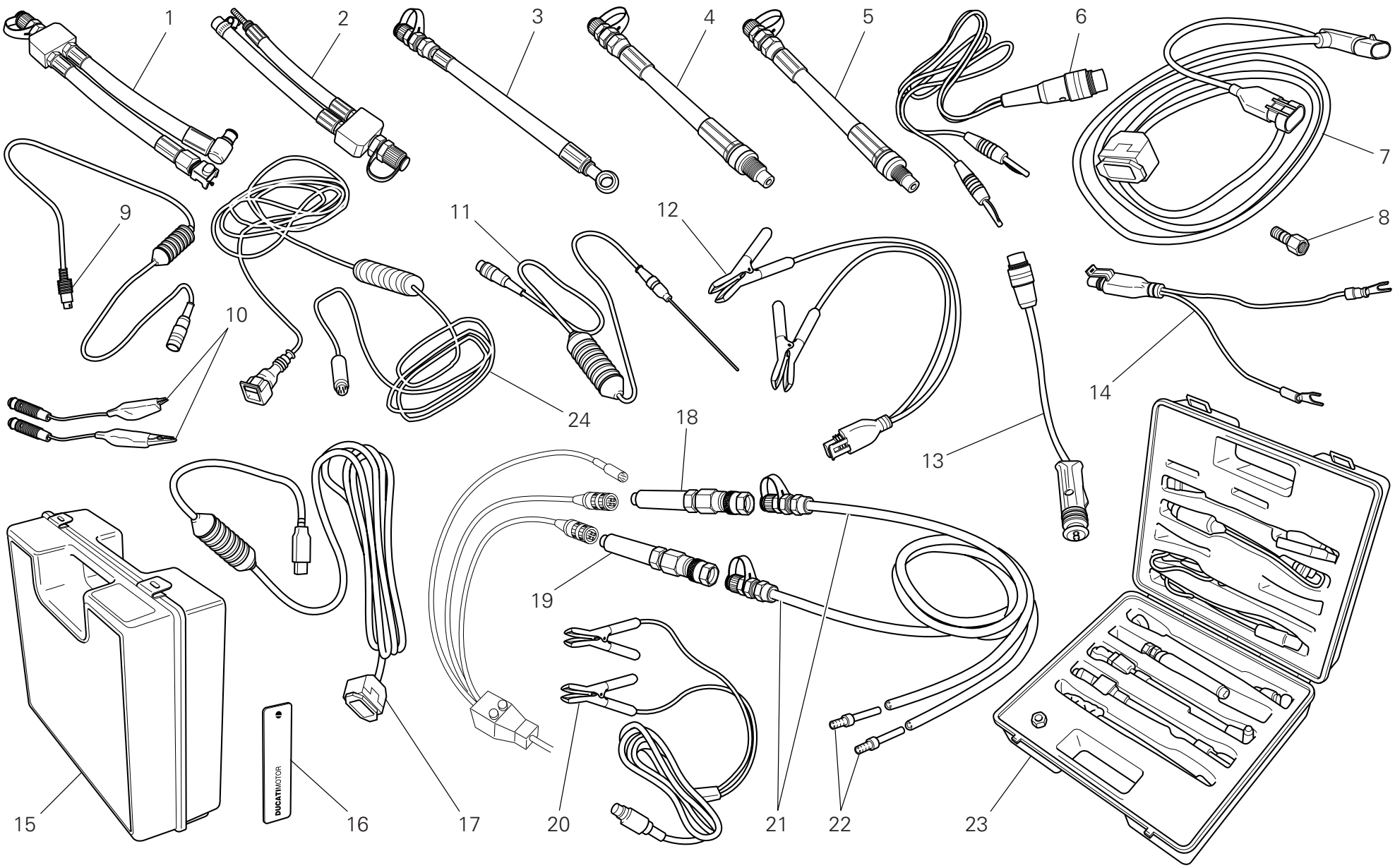

DRAWING 001d Workshop service tools

| NOTES NO. | CODE NO. | DESCRIPTION | VALIDITY | Q.TY |
|---|---|---|---|---|
| 1 | 590.1.189.1A | Fuel pressure line HS. | | 1 |
| 2 | 590.1.190.1A | Fuel pressure line ST/SS/M. | | 1 |
| 3 | 875.1.065.1A | Oil pressure line | | 1 |
| 4 | 552.1.037.1A | Fitting - cylinder compression M12 | | 1 |
| 5 | 552.1.038.1A | Fitting - cylinder compression M10 | | 1 |
| 6 | 514.1.037.1A | Cable Volt PF DUC 21 | | 1 |
| 7 | 97900.0227 | Main cable (MARELLI) | | 1 |
| 8 | 814.1.114.1A | Oil pressure fitting | | 1 |
| 9 | 514.1.032.1A | Cable for supplementary tests | | 1 |
| 10 | 514.1.035.1A | Red clamp cable | | 1 |
| 10 | 514.1.036.1A | Black clamp cable | | 1 |
| 11 | 552.1.040.1A | Temperature probe | | 1 |
| 12 | 97900.0228 | Battery connection adapter | | 1 |
| 13 | 514.1.033.1A | Electric lighter connection adapter (ST) | | 1 |
| 14 | 514.1.038.1A | Battery connection adapter | | 1 |
| 15 | 698.1.033.1A | Red case with sponge rubber | | 1 |
| 16 | 88765.1126T | DUCATI sticker RH/LH side | | 2 |
| 17 | 97900.0231 | (USB) Adaptor | | 1 |
| 18 | 97900.0218 | Depressure sensor | | 1 |
| 19 | 552.1.039.1A | Pressure sensor | | 1 |
| 20 | 97900.0230 | Feeder | | 1 |
| 21 | 97900.0220 | Depressure/pressure line | | 2 |
| 22 | 97900.0221 | Union | | 4 |
| 23 | 97900.0003 | Pressure kit | | 1 |
| 24 | 88765.1126C | Cable for potentiometer adjustement | | 1 |



CATALOGUE No: 915.1.289.1B
ISSUED: 04 - 09

DRAWING 002 Gearchange control

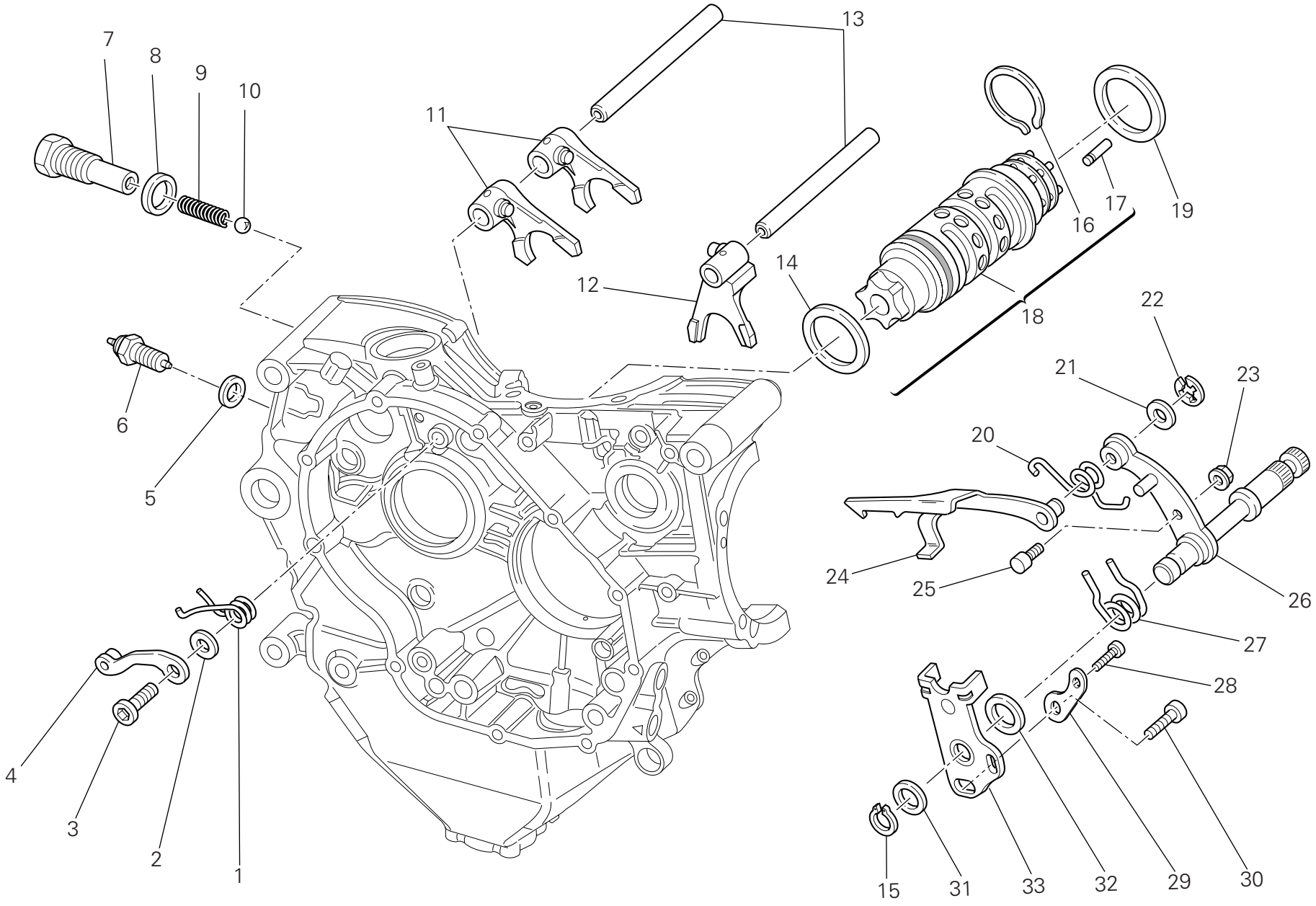

DRAWING 002 Gearchange control

| NOTES NO. | CODE NO. | DESCRIPTION | VALIDITY | Q.TY |
|---|---|---|---|---|
| 1 | 799.1.049.1A | Return spring | | 1 |
| 2 | 852.1.053.2A | Washer | | 1 |
| 3 | 779.1.039.1A | Special screw | | 1 |
| 4 | 455.2.003.1A | Gear stopper assembly | | 1 |
| 5 | 852.5.024.1A | Gasket th.1 | | 1 |
| 6 | 539.1.021.1B | Switch | | 1 |
| 7 | 779.1.203.3A | Special screw | | 1 |
| 8 | 0272.91.090 | Gasket | | 1 |
| 9 | 0660.13.143 | Gear selector spring | | 1 |
| 10 | 76835.1134 | Ball | | 1 |
| 11 | 180.1.001.1A | 1st,4th-2nd,3rd gear selector fork | | 2 |
| 12 | 180.1.002.1A | 5th,6th gear selector fork | | 1 |
| 13 | 821.1.268.1A | Fork pin | | 2 |
| 14 | 852.1.005.1A | Shim th. 1 | | 1 |
| 15 | 73500.1542 | Circlip | | 1 |
| 16 | 882.1.006.1A | Needle retaining ring (square cross-section) | | 1 |
| 17 | 821.1.070.1A | Pin | | 6 |
| 18 | 182.2.028.3A | Complete gearbox drum | | 1 |
| 19 | 852.1.094.1A | Shim th. 0.9 | | 1 |
| 20 | 799.1.482.1A | Fork return spring | | 1 |
| 21 | 0400.09.050 | Shim th. 0.5 | | 1 |
| 21 | 0765.92.205 | Shim th. 0.2 | | 2 |
| 22 | 884.5.034.1A | Ring | | 1 |
| 23 | 748.1.040.1A | Nut | | 1 |
| 24 | 180.1.008.1A | Gearbox drum control fork | | 1 |
| 25 | 0660.13.165 | Gearchange lever pin | | 1 |
| 26 | 821.1.001.1A | Pin with gearchange lever | | 1 |
| 27 | 0799.13.110 | Gearchange lever return spring | | 1 |
| 28 | 771.5.067.0Z | Screw | | 1 |
| 29 | 713.1.915.1A | Spacer | | 1 |
| 30 | 771.5.125.0Z | Screw | | 1 |
| 31 | 0400.29.125 | Shim th. 0.2 | | 2 |
| 31 | 0400.29.126 | Shim th. 0.5 | | 1 |
| 32 | 881.1.012.1A | Centering ring | | 1 |
| 33 | 826.1.030.1A | Stopper plate | | 1 |



CATALOGUE No: 915.1.289.1B
ISSUED: 04 - 09

DRAWING 003 Gearbox

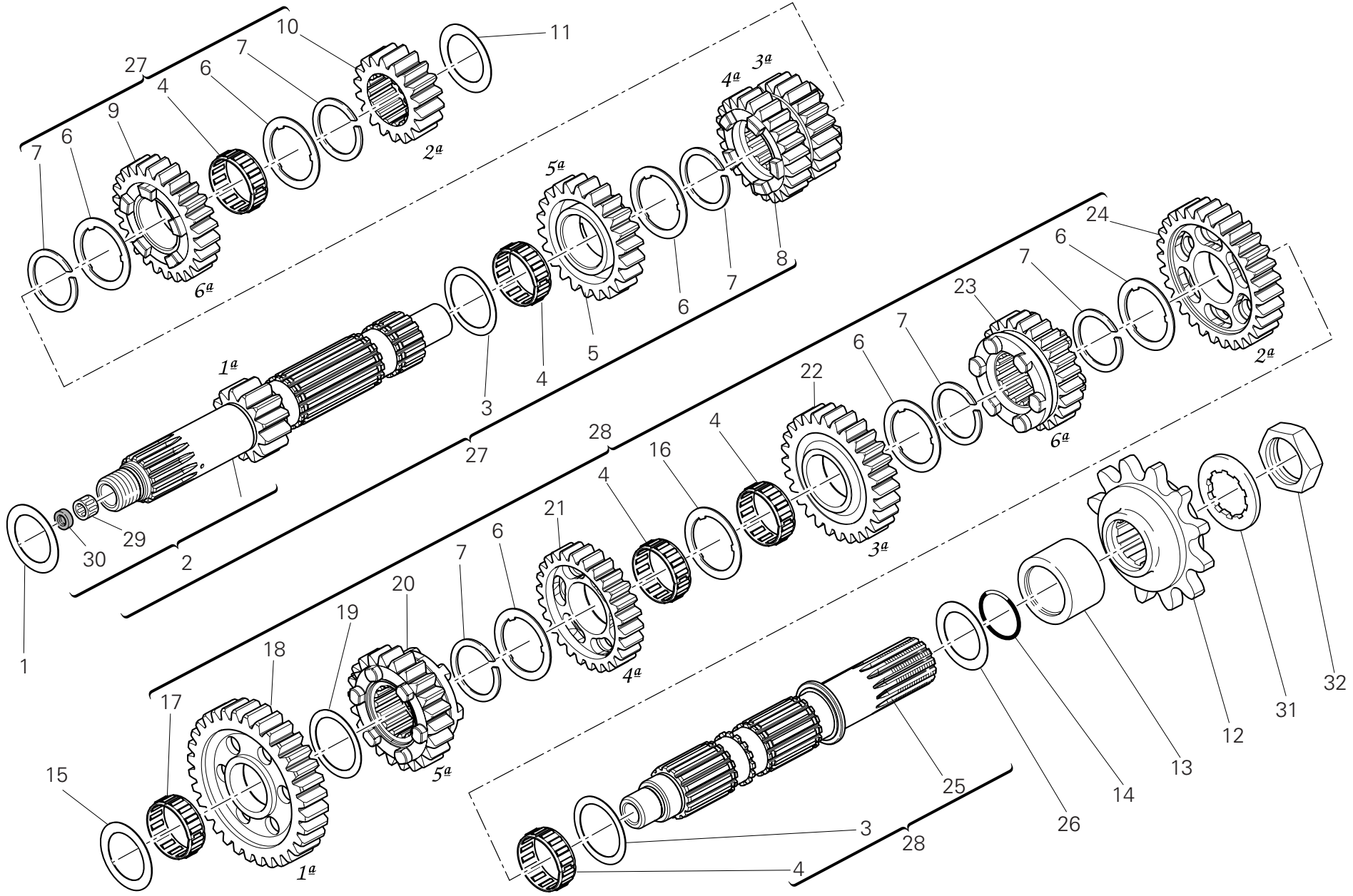

DRAWING 003 Gearbox

| NOTES NO. | CODE NO. | DESCRIPTION | VALIDITY | Q.TY |
|---|---|---|---|---|
| 1 | 0251.47.054 | Shim th. 1.2 | | 1 |
| 2 | 150.2.105.1A | Gearbox main shaft | | 1 |
| 3 | 0670.16.150 | Shim th. 0.5 | | 2 |
| 4 | 701.4.005.1A | Needle bearing | | 5 |
| 5 | 172.1.004.3C | Driving gear 5th sp. | | 1 |
| 6 | 856.1.001.1A | Grooved washer th. 0.5 | | 6 |
| 7 | 0670.16.145 | Snap ring | | 6 |
| 8 | 172.1.003.3C | Driving gear 3rd/4th sp. | | 1 |
| 9 | 172.1.005.3C | Driving gear 6th sp. | | 1 |
| 10 | 172.1.002.1B | Driving gear 2nd sp. | | 1 |
| 11 | 713.1.014.1E | Shim th. 1.6 | | 1 |
| 12 | 449.1.053.1A | Chain sprocket | | 1 |
| 13 | 713.1.393.1A | Spacer | | 1 |
| 14 | 463.2.053.7A | O-ring | | 1 |
| 15 | 713.1.266.1A | Spacer th. 3,15 | | 1 |
| 16 | 856.1.031.1A | Grooved washer th. 0.5 | | 1 |
| 17 | 76402.0002 | Needle bearing | | 1 |
| 18 | 172.1.218.2A | Driven gear 1st sp. | | 1 |
| 19 | 0670.16.155 | Shim th. 1 | | 1 |
| 20 | 172.1.010.3C | Driven gear 5th sp. | | 1 |
| 21 | 172.1.009.1C | Driven gear 4th sp. | | 1 |
| 22 | 172.1.008.1C | Driven gear 3rd sp. | | 1 |
| 23 | 172.1.011.3C | Driven gear 6th sp. | | 1 |
| 24 | 172.1.219.2A | Driven gear 2nd sp. | | 1 |
| 25 | 149.1.061.1A | Gearbox lay shaft | | 1 |
| 26 | 0670.16.170 | Shim th. 0.8 | | 1 |
| 27 | 150.2.106.1A | Complete main shaft | | 1 |
| 28 | 150.2.092.3A | Complete lay shaft | | 1 |
| 29 | 702.5.044.1A | Needle bearing | | 1 |
| 30 | 930.4.002.2A | Seal ring | | 1 |
| 31 | 851.1.004.1A | Lock washer | | 1 |
| 32 | 750.1.007.1A | Nut | | 1 |



CATALOGUE No: 915.1.289.1B
ISSUED: 04 - 09

DRAWING 004 Clutch

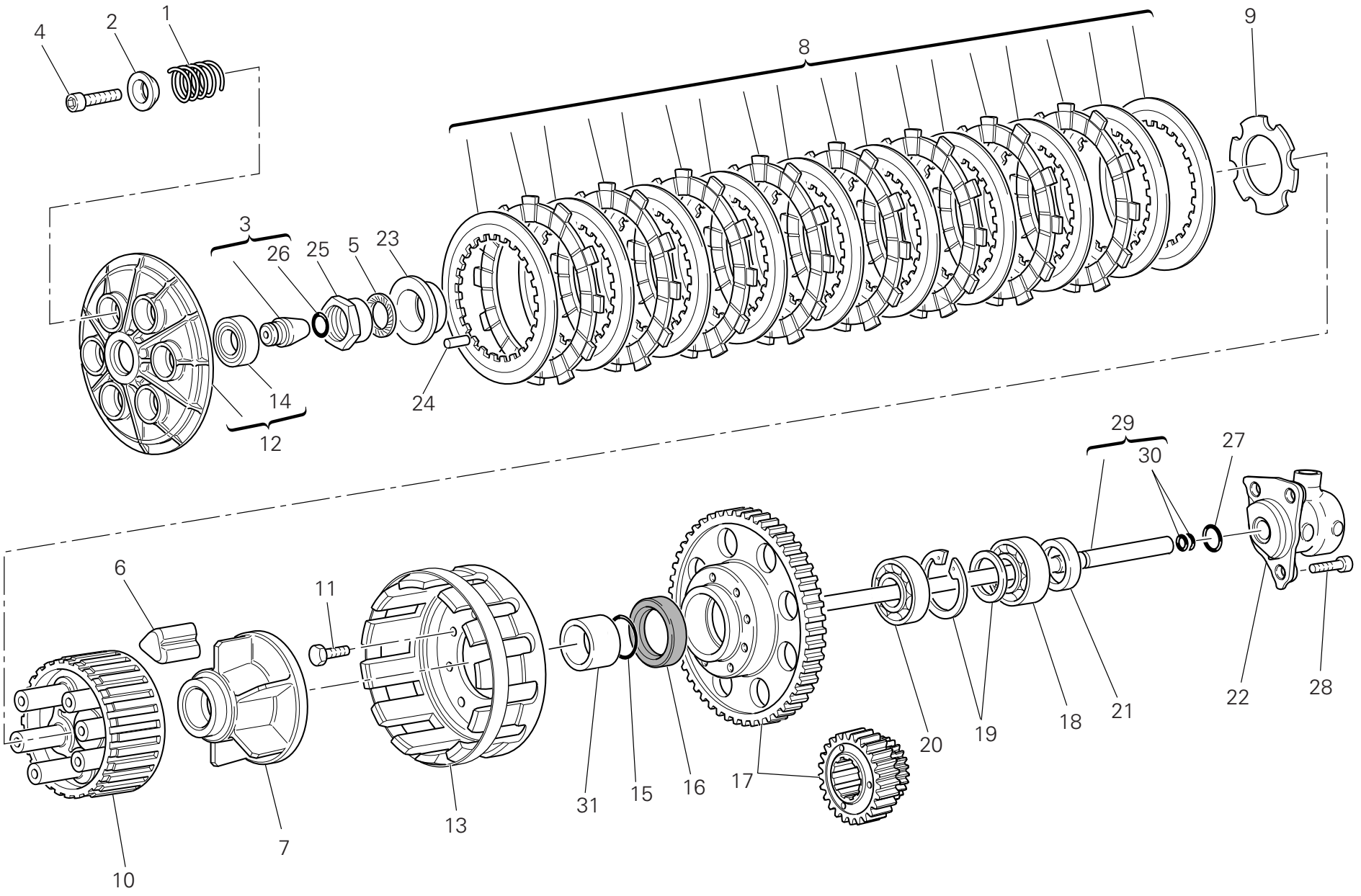

DRAWING 004 Clutch

| NOTES NO. | CODE NO. | DESCRIPTION | VALIDITY | Q.TY |
|---|---|---|---|---|
| 1 | 799.1.253.1A | Clutch spring | | 6 |
| 2 | 841.1.051.1B | Retainer | | 6 |
| 3 | 818.2.009.1A | Clutch control pin | | 1 |
| 4 | 771.5.043.8B | Screw | | 6 |
| 5 | 851.4.002.1A | Lock washer | | 1 |
| 6 | 764.1.003.1B | Rubber pad | | 12 |
| 7 | 162.1.001.1C | Plate holder hub | | 1 |
| 8 | 190.2.020.1A | Clutch plates set | | 1 |
| 9 | 851.1.001.1B | Lock washer | | 1 |
| 10 | 196.1.001.1D | Clutch drum | | 1 |
| 11 | 70610.8120 | Screw | | 8 |
| 12 | 194.2.043.1A | Pressure plate | | 1 |
| 13 | 198.1.029.1A | Clutch housing | | 1 |
| 14 | 702.5.053.1A | Bearing | | 1 |
| 15 | 463.2.053.7A | O-ring | | 1 |
| 16 | 930.4.035.1A | Seal ring | | 1 |
| 17 | 170.2.109.1A | Clutch assembly | | 1 |
| 18 | 702.5.051.1A | Bearing | | 1 |
| 19 | 881.2.001.1A | Circlip - spacer | | 1 |
| 20 | 702.4.017.1A | Bearing | | 1 |
| 21 | 0660.16.145 | Spacer | | 1 |
| 22 | 195.4.003.1A | Piston assembly | | 1 |
| 23 | 710.1.124.2A | Bush | | 1 |
| 24 | 74224.0570 | Pin | | 4 |
| 25 | 748.1.066.2A | Special nut | | 1 |
| 26 | 886.4.118.1A | O-ring | | 1 |
| 27 | 886.4.043.1A | O-ring | | 1 |

| NOTES NO. | CODE NO. | DESCRIPTION | VALIDITY | Q.TY |
|---|---|---|---|---|
| 28 | 771.5.065.2BB | Screw | | 3 |
| 29 | 117.2.006.1A | Clutch control rod | | 1 |
| 30 | 93823.2018 | O-ring | | 2 |
| 31 | 713.1.393.1A | Spacer | | 1 |



CATALOGUE No: 915.1.289.1B
ISSUED: 04 - 09

DRAWING 005 Clutch-side crankcase cover

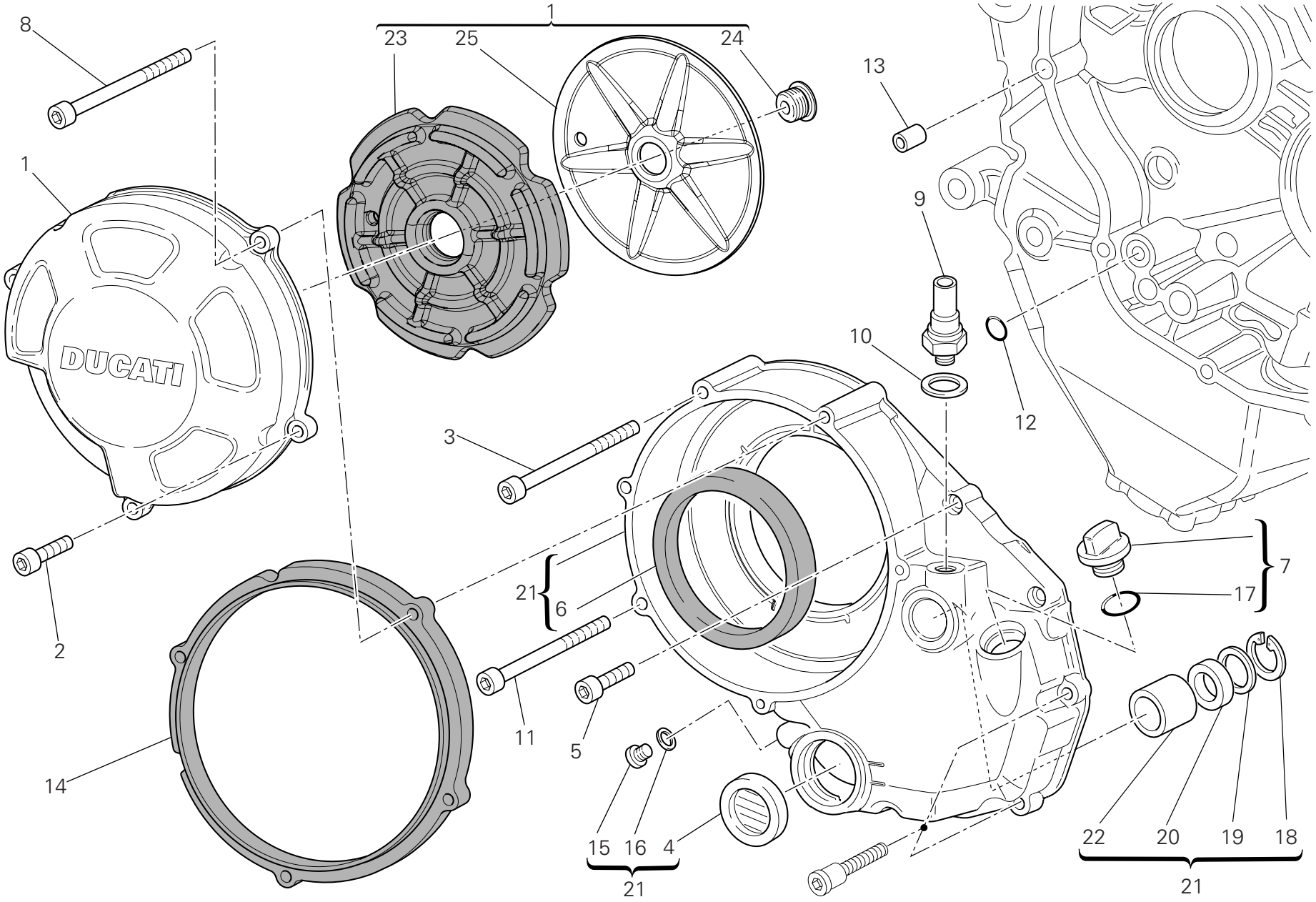

DRAWING 005 Clutch-side crankcase cover

| NOTES NO. | CODE NO. | DESCRIPTION | VALIDITY | Q.TY |
|---|---|---|---|---|
| 1 | 243.2.125.1AC | Cover clutch side (GOLD) | | 1 |
| 2 | 771.1.052.1A | Screw | | 2 |
| 3 | 771.5.078.8B | Screw | | 1 |
| 4 | 254.4.001.2A | Oil level sight glass | | 1 |
| 5 | 771.5.069.8B | Screw | | 4 |
| 6 | 930.4.034.1A | Ring | | 1 |
| 7 | 893.2.013.1A | Complete cap | | 1 |
| 8 | 771.1.375.1A | Screw | | 2 |
| 9 | 539.4.030.2A | Switch | | 1 |
| 10 | 852.1.195.1A | Gasket th.2 | | 1 |
| 11 | 771.5.079.8B | Screw | | 1 |
| 12 | 886.4.132.1A | O-ring | | 1 |
| 13 | 711.1.160.1A | Locating bush | | 1 |
| 14 | 788.1.106.2A | Clutch cover gasket | | 1 |
| 15 | 780.5.001.1A | Cap | | 1 |
| 16 | 852.5.024.1A | Gasket th.1 | | 1 |
| 17 | 93823.3075 | O-Ring | | 1 |
| 18 | 884.5.013.1A | Circlip | | 1 |
| 19 | 852.1.135.1A | Shim th. 1 | | 1 |
| 20 | 930.4.021.1A | Seal ring | | 1 |
| 21 | 243.2.115.1AE | Cover clutch side (BLACK) | | 1 |
| 22 | 0665.49.680 | Bush | | 1 |
| 23 | 486.1.082.1A | Panel | | 1 |
| 24 | 779.1.501.1A | Screw | | 1 |
| 25 | 827.1.433.1A | Plate | | 1 |

| NOTES NO. | CODE NO. | DESCRIPTION | VALIDITY | Q.TY |
|---|---|---|---|---|



CATALOGUE No: 915.1.289.1B
ISSUED: 04 - 09

DRAWING 006 Connecting rods

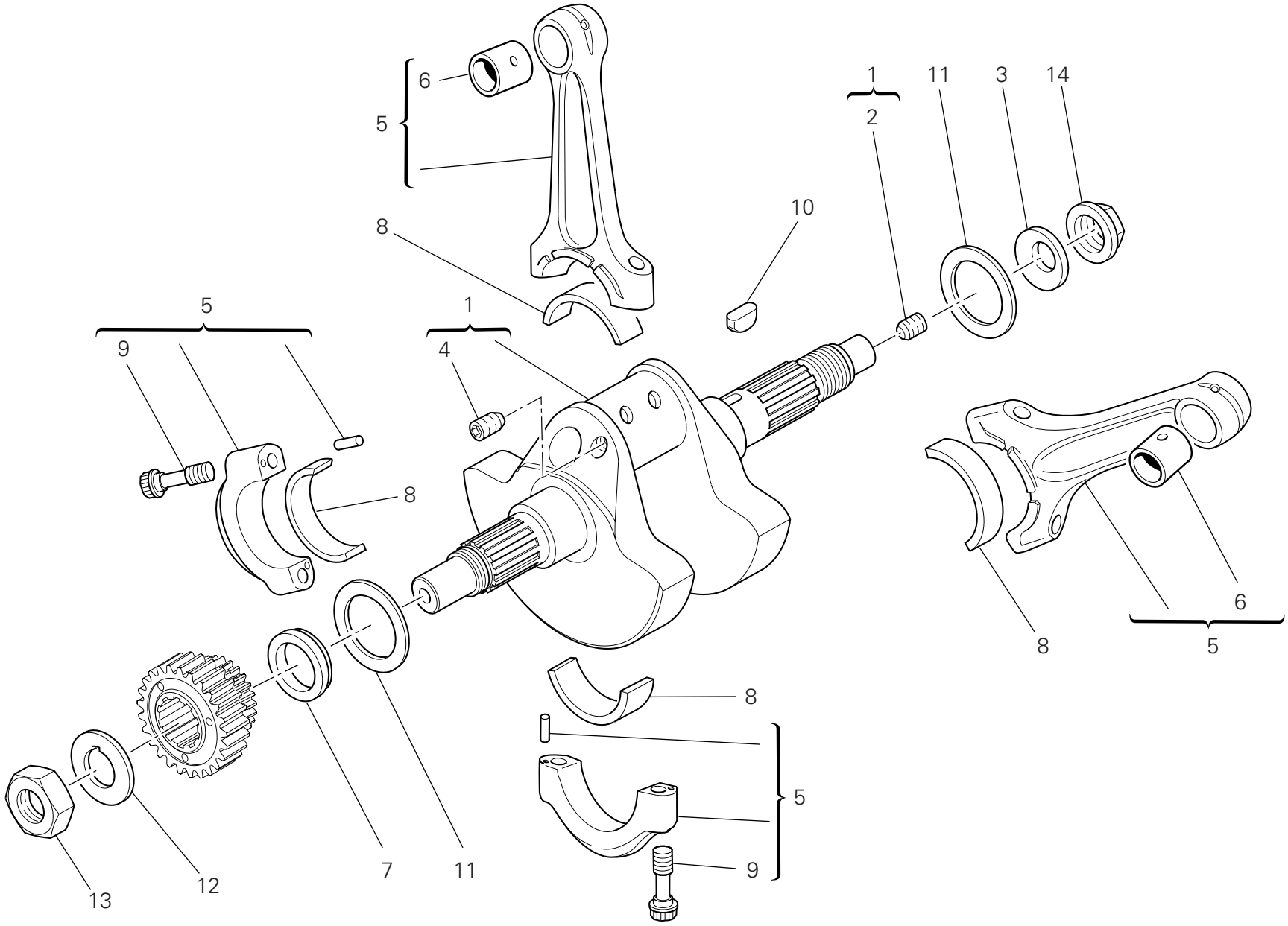

DRAWING 006 Connecting rods

| NOTES NO. | CODE NO. | DESCRIPTION | VALIDITY | Q.TY |
|---|---|---|---|---|
| 1 | 146.2.143.1A | Crankshaft | | 1 |
| 2 | 779.1.109.2A | Special screw | | 1 |
| 3 | 799.1.051.2A | Spring washer | | 1 |
| 4 | 779.1.547.1A | Special screw | | 2 |
| 5 | 158.2.020.2A | Connecting rods pair | | 1 |
| 6 | 711.1.089.1A | Bush | | 2 |
| 7 | 710.1.061.1A | Spacer | | 1 |
| 8 | 112.1.012.1AB | Half-bearing (BLUE) | | 2 |
| 8 | 112.1.012.1AC | Half-bearing (YELLOW) | | 2 |
| 9 | 779.1.404.1A | Special screw | | 4 |
| 10 | 680.1.013.1A | Woodruff key | | 1 |
| 11 | 852.1.104.1H | Shim th. 2.25 | | 2 |
| 11 | 852.1.104.2A | Shim th. 1.9 | | 2 |
| 11 | 852.1.104.2B | Shim th. 1.95 | | 2 |
| 11 | 852.1.104.2C | Shim th. 2 | | 2 |
| 11 | 852.1.104.2D | Shim th. 2,05 | | 2 |
| 11 | 852.1.104.2E | Shim th. 2,1 | | 2 |
| 11 | 852.1.104.2F | Shim th. 2,15 | | 2 |
| 11 | 852.1.104.2G | Shim th. 2.2 | | 2 |
| 11 | 852.1.104.2I | Shim th. 2.3 | | 2 |
| 11 | 852.1.104.2J | Shim th. 2.35 | | 2 |
| 11 | 852.1.104.1K | Shim th. 2,4 | | 2 |
| 11 | 852.1.104.1L | Shim th. 2,45 | | 2 |
| 11 | 852.1.104.1M | Shim th. 2.5 | | 2 |
| 11 | 852.1.104.1N | Shim th. 2.55 | | 2 |
| 12 | 851.1.010.1A | Lock washer | | 1 |
| 13 | 750.1.057.1A | Nut | | 1 |
| 14 | 750.1.012.2A | Nut | | 1 |



CATALOGUE No: 915.1.289.1B
ISSUED: 04 - 09

DRAWING 007 Cylinders - pistons

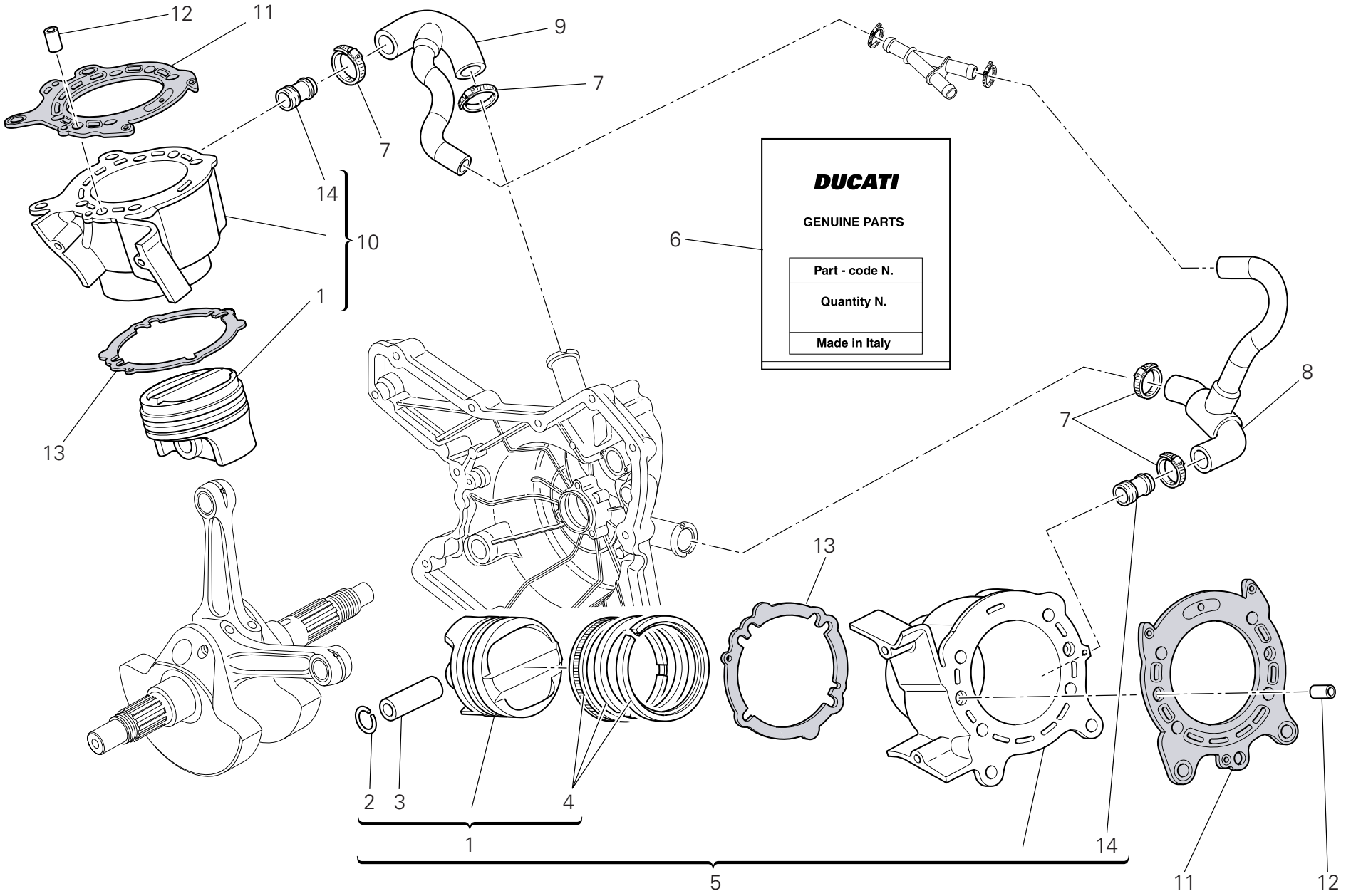

DRAWING 007 Cylinders - pistons

| NOTES NO. | CODE NO. | DESCRIPTION | VALIDITY | Q.TY |
|---|---|---|---|---|
| 1 | 122.2.167.2A | Complete piston | | 1 |
| 2 | 121.1.079.1A | Piston pin circlip | | 4 |
| 3 | 121.1.078.1B | Piston pin | | 2 |
| 4 | 121.2.051.2A | Piston rings set | | 2 |
| 5 | 120.2.150.4AB | Cylinder-piston fit (horizontal) | | 1 |
| 6 | 791.2.044.1A | Gaskets set | | 1 |
| 7 | 741.4.192.1A | Clamp | | 4 |
| 8 | 800.1.174.2A | Horizontal cylinder water inlet hose | | 1 |
| 9 | 800.1.175.2A | Vertical cylinder water inlet hose | | 1 |
| 10 | 120.2.151.4AB | Cylinder-piston fit (vertical) | | 1 |
| 11 | 786.1.092.2A | Head-cylinder gasket | | 2 |
| 12 | 711.1.219.1A | Bush | | 4 |
| 13 | 786.1.094.1A | Cylinder-crankcase gasket | | 2 |
| 14 | 668.1.001.4A | Water pump delivery filler | | 2 |

| NOTES NO. | CODE NO. | DESCRIPTION | VALIDITY | Q.TY |
|---|---|---|---|---|



CATALOGUE No: 915.1.289.1B
ISSUED: 04 - 09

DRAWING 008 Timing system

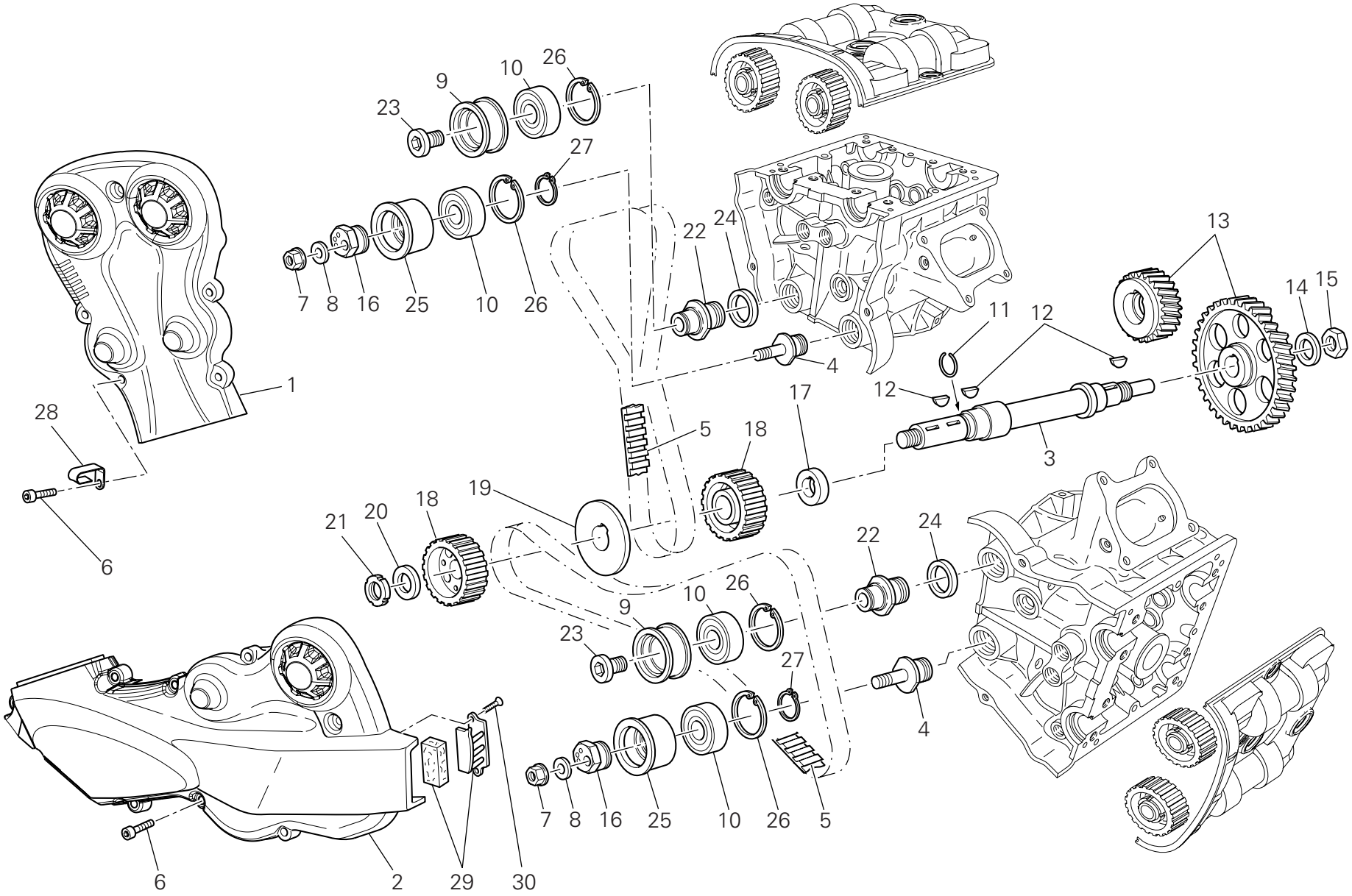

DRAWING 008 Timing system

| NOTES NO. | CODE NO. | DESCRIPTION | VALIDITY | Q.TY |
|---|---|---|---|---|
| 1 | 245.1.106.1A | Vertical belt outer cover | | 1 |
| 2 | 245.1.105.1A | Horizontal belt outer cover | | 1 |
| 3 | 147.1.014.2A | Timing lay shaft | | 1 |
| 4 | 451.1.044.1A | Tensioner roller pin | | 2 |
| 5 | 737.4.025.1A | Timing drive toothed belt | | 2 |
| 6 | 771.1.049.1A | Screw | | 13 |
| 7 | 749.4.008.1A | Nut | | 2 |
| 8 | 852.1.174.1A | Washer | | 2 |
| 9 | 451.1.018.2A | Fixed tensioner bush | | 2 |
| 10 | 702.4.058.1A | Bearing | | 4 |
| 11 | 882.1.003.1A | Snap ring | | 1 |
| 12 | 680.1.013.1A | Woodruff key | | 3 |
| 13 | 171.Z.003.1A | Timing gears pair | | 1 |
| 14 | 851.1.013.1A | Lock washer | | 1 |
| 15 | 0124.40.060 | Hexagon nut | | 1 |
| 16 | 451.1.043.1A | Tensioner eccentric | | 2 |
| 17 | 716.1.128.1A | Spacer | | 1 |
| 18 | 255.1.010.4B | Timing belt roller | | 2 |
| 19 | 856.1.062.2A | Belt roller separating washer | | 1 |
| 20 | 716.1.072.2A | Spacer | | 1 |
| 21 | 703.5.006.2A | Elastic-stop ring nut | | 1 |
| 22 | 451.1.017.1A | Fixed tensioner roller pin | | 2 |
| 23 | 779.1.187.1A | Setscrew | | 2 |
| 24 | 713.1.409.1A | Spacer | | 2 |
| 25 | 451.1.047.1A | Movable tensioner roller bush | | 2 |
| 26 | 73503.3804 | Circlip | | 4 |
| 27 | 73500.2054 | Snap ring | | 2 |
| 28 | 830.1.494.1B | Fairlead | | 1 |
| 29 | 245.2.107.1A | Filter and holder | | 1 |
| 30 | 772.5.034.1A | Screw | | 2 |



CATALOGUE No: 915.1.289.1B
ISSUED: 04 - 09

DRAWING 009 Filters and oil pump

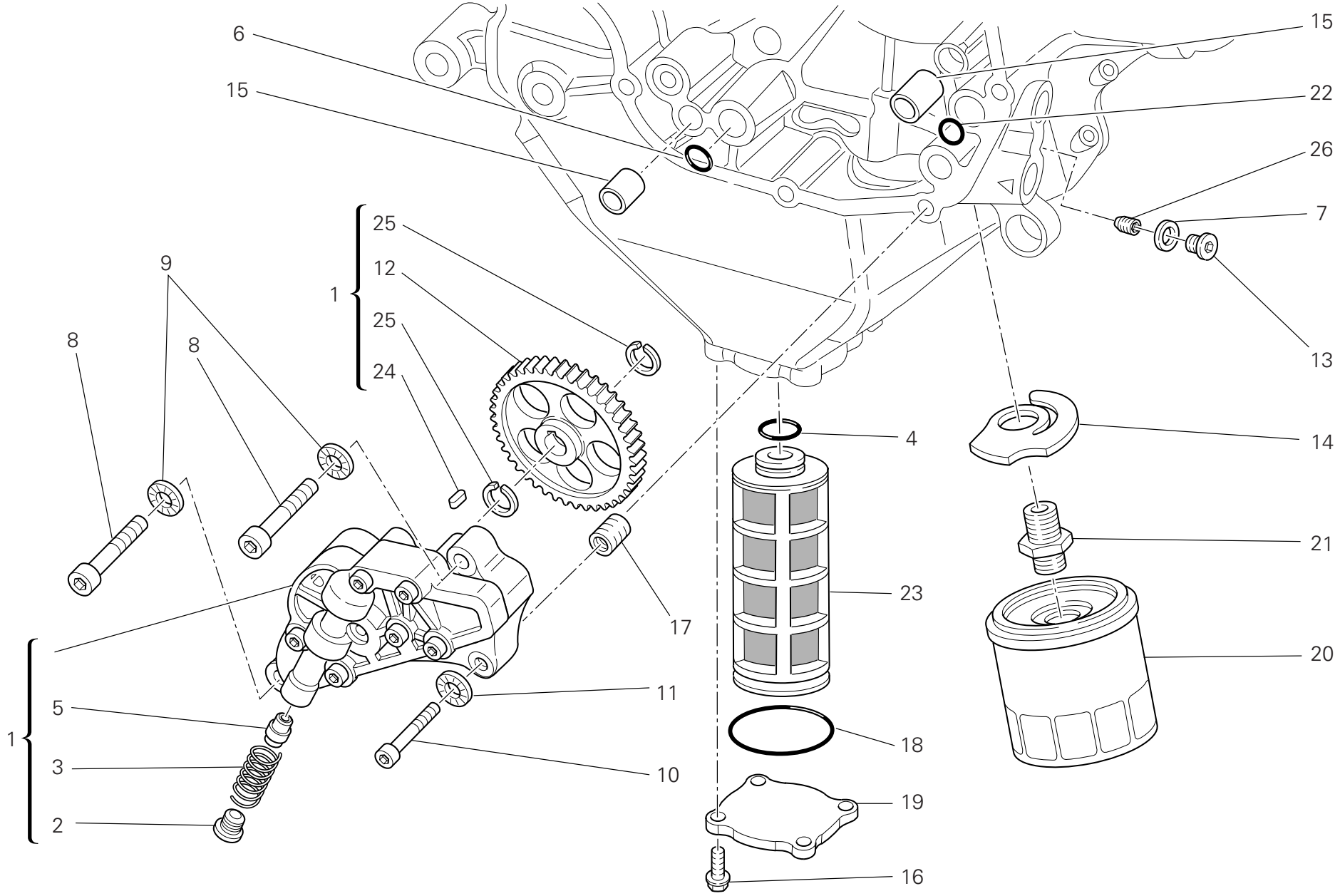

DRAWING 009 Filters and oil pump

| NOTES NO. | CODE NO. | DESCRIPTION | VALIDITY | Q.TY |
|---|---|---|---|---|
| 1 | 174.2.038.1A | Complete oil pump | | 1 |
| 2 | 780.1.018.1A | Bypass cap | | 1 |
| 3 | 799.1.055.1A | Bypass spring | | 1 |
| 4 | 886.4.033.1A | O-ring | | 1 |
| 5 | 593.1.018.1A | Bypass valve | | 1 |
| 6 | 886.4.037.1A | O-ring | | 1 |
| 7 | 852.1.195.1A | Gasket th.2 | | 1 |
| 8 | 771.5.129.8B | Screw | | 2 |
| 9 | 852.1.174.1A | Washer | | 2 |
| 10 | 771.5.069.8B | Screw | | 1 |
| 11 | 852.1.172.1A | Washer | | 1 |
| 12 | 174.1.038.1A | Pump drive gear | | 1 |
| 13 | 779.1.162.2A | Cap | | 1 |
| 14 | 799.2.077.2A | Bypass spring | | 1 |
| 15 | 0759.49.280 | Locating bush | | 2 |
| 16 | 772.1.060.1A | Screw | | 4 |
| 17 | 0670.49.310 | Reduction bush | | 1 |
| 18 | 886.4.034.1A | O-ring | | 1 |
| 19 | 247.1.290.1AB | Cover (BLACK) | | 1 |
| 20 | 444.4.003.4A | Oil filter cartridge | | 1 |
| 21 | 815.1.028.1A | Nipple | | 1 |
| 22 | 886.4.132.1A | O-ring | | 1 |
| 23 | 894.1.020.1A | Oil net filter | | 1 |
| 24 | 680.1.001.1B | Woodruff key | | 1 |
| 25 | 884.5.039.1A | Circlip | | 2 |
| 26 | 778.5.016.1A | Threaded dowel | | 1 |

| NOTES NO. | CODE NO. | DESCRIPTION | VALIDITY | Q.TY |
|---|---|---|---|---|



CATALOGUE No: 915.1.289.1B
ISSUED: 04 - 09

DRAWING 010 Crankcase halves

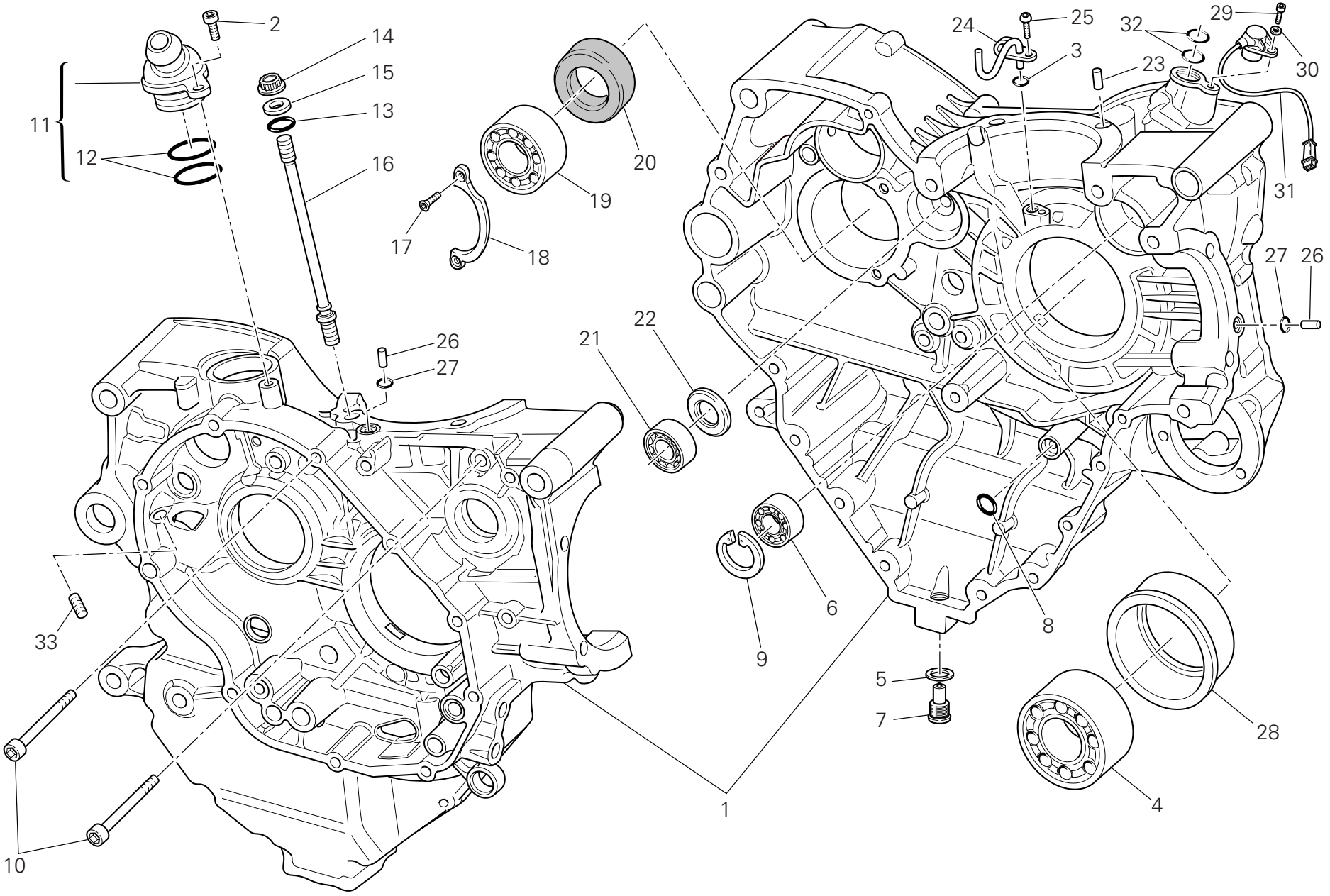

DRAWING 010 Crankcase halves

| NOTES NO. | CODE NO. | DESCRIPTION | VALIDITY | Q.TY |
|---|---|---|---|---|
| 1 | 225.2.248.1A | Complete half-crankcases pair | | 1 |
| 2 | 771.5.065.8B | Screw | | 1 |
| 3 | 886.5.013.1A | O-Ring | | 1 |
| 4 | 75191.3380 | Bearing | | 1 |
| 5 | 852.5.042.1A | Copper gasket sp. 1,5 | | 1 |
| 6 | 702.5.008.1A | Bearing | | 1 |
| 7 | 893.2.006.2A | Cap | | 1 |
| 8 | 886.4.132.1A | O-ring | | 1 |
| 9 | 73503.3380 | Circlip | | 1 |
| 10 | 771.5.139.8B | Screw | | 2 |
| 11 | 593.2.042.1A | Breather valve | | 1 |
| 12 | 463.2.022.2A | O-Ring | | 2 |
| 13 | 886.4.118.1A | O-ring | | 8 |
| 14 | 748.1.050.1A | Nut | | 8 |
| 15 | 856.1.064.2A | Special washer | | 8 |
| 16 | 766.1.055.2B | Stud bolt for fastening head cylinder | | 8 |
| 17 | 72094.1616 | Screw | | 2 |
| 18 | 826.1.012.1A | Keep plate | | 1 |
| 19 | 702.4.013.1A | Bearing | | 1 |
| 20 | 930.4.022.1A | Seal ring | | 1 |
| 21 | 702.4.033.1A | Bearing | | 1 |
| 22 | 0370.49.250 | Washer | | 1 |
| 23 | 860.1.004.1A | Locating dowel | | 2 |
| 24 | 875.1.146.1A | Jet | | 1 |
| 25 | 775.1.031.1B | Screw | | 1 |
| 26 | 860.1.005.1A | Locating dowel | | 2 |
| 27 | 886.1.024.1A | O-Ring | | 2 |

| NOTES NO. | CODE NO. | DESCRIPTION | VALIDITY | Q.TY |
|---|---|---|---|---|
| 28 | 710.1.125.1A | Bearing holder bush | | 1 |
| 29 | 775.5.021.1A | Screw | | 1 |
| 30 | 853.1.003.1A | Spring washer | | 1 |
| 31 | 552.4.132.1A | Rpm/timing sensor | | 1 |
| 32 | 886.4.033.1A | O-ring | | 2 |
| 33 | 778.5.016.1A | Threaded dowel | | 1 |



CATALOGUE No: 915.1.289.1B
ISSUED: 04 - 09

DRAWING 010a Crankcase halves

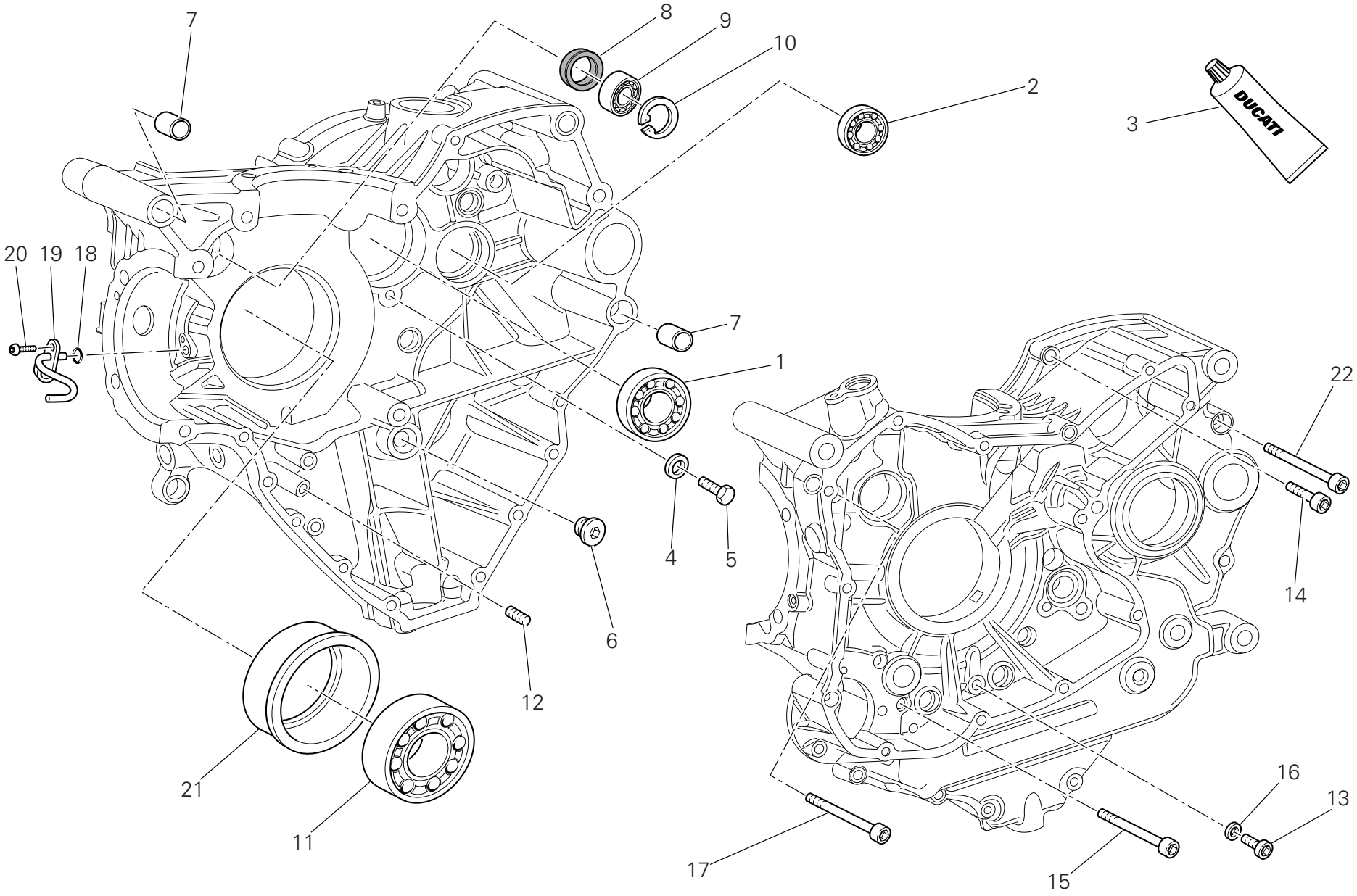

DRAWING 010a Crankcase halves

| NOTES NO. | CODE NO. | DESCRIPTION | VALIDITY | Q.TY |
|---|---|---|---|---|
| 1 | 702.5.019.1A | Bearing | | 1 |
| 2 | 702.4.033.1A | Bearing | | 1 |
| 3 | 94247.0014 | Fluid sealant | | 1 |
| 4 | 713.1.140.1A | Spacer | | 2 |
| 5 | 770.5.250.8B | Screw | | 2 |
| 6 | 780.1.072.1A | Cap | | 1 |
| 7 | 711.1.095.1A | Bush | | 2 |
| 8 | 930.4.123.1A | Seal ring | | 1 |
| 9 | 75794.1542 | Bearing | | 1 |
| 10 | 73503.3380 | Circlip | | 1 |
| 11 | 702.4.020.1A | Bearing | | 1 |
| 12 | 778.5.016.1A | Threaded dowel | | 1 |
| 13 | 773.5.061.8B | Screw | | 1 |
| 14 | 771.5.072.8B | Screw | | 8 |
| 15 | 771.5.080.8B | Screw | | 2 |
| 16 | 852.5.023.1A | Gasket | | 1 |
| 17 | 771.5.139.8B | Screw | | 2 |
| 18 | 886.5.013.1A | O-Ring | | 1 |
| 19 | 875.1.146.1A | Jet | | 1 |
| 20 | 775.1.031.1B | Screw | | 1 |
| 21 | 710.1.126.1A | Bearing holder bush | | 1 |
| 22 | 771.5.136.8B | Screw | | 3 |

| NOTES NO. | CODE NO. | DESCRIPTION | VALIDITY | Q.TY |
|---|---|---|---|---|



CATALOGUE No: 915.1.289.1B
ISSUED: 04 - 09

DRAWING 011 Water pump-altr-side crnkcse cover

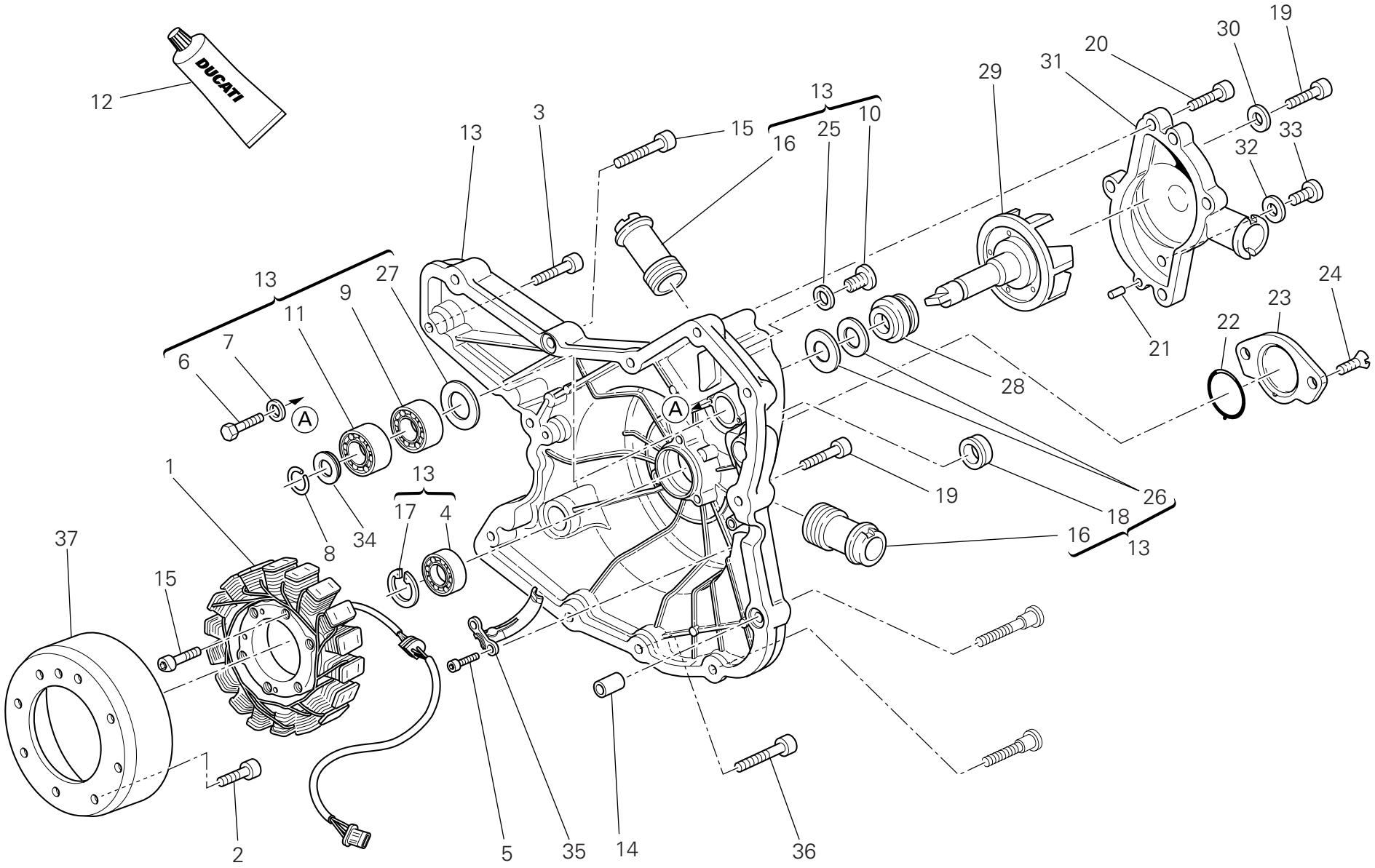

DRAWING 011 Water pump-altr-side crnkcse cover

| NOTES NO. | CODE NO. | DESCRIPTION | VALIDITY | Q.TY |
|---|---|---|---|---|
| 1 | 264.4.059.1A | Stator "KOKUSAN" | | 1 |
| 2 | 779.4.075.1A | Screw | | 8 |
| 3 | 771.5.067.8B | Screw | | 2 |
| 4 | 702.5.008.1A | Bearing | | 1 |
| 5 | 771.5.064.8B | Screw | | 2 |
| 6 | 770.5.250.8B | Screw | | 2 |
| 7 | 852.1.172.1A | Washer | | 2 |
| 8 | 884.5.011.1A | A 10 Ring | | 1 |
| 9 | 702.4.010.2A | Bearing | | 1 |
| 10 | 779.1.026.2A | Screw | | 1 |
| 11 | 702.4.009.1A | Bearing | | 1 |
| 12 | 94247.0014 | Fluid sealant | | 1 |
| 13 | 242.2.074.1AC | Generator cover (BLACK) | | 1 |
| 14 | 711.1.160.1A | Locating bush | | 2 |
| 15 | 771.5.071.8B | Screw | | 1 |
| 16 | 668.1.001.4A | Water pump delivery filler | | 2 |
| 17 | 73503.3380 | Circlip | | 1 |
| 18 | 93783.1524 | Seal ring | | 1 |
| 19 | 771.5.069.8B | Screw | | 7 |
| 20 | 771.5.066.8B | Screw | | 4 |
| 21 | 860.1.004.1A | Locating dowel | | 2 |
| 22 | 886.1.095.1A | O-ring | | 1 |
| 23 | 247.1.305.1AF | Cover (BLACK) | | 1 |
| 24 | 777.5.049.8B | Screw | | 2 |
| 25 | 852.5.026.1A | Aluminium gasket th.1,5 | | 1 |
| 26 | 930.5.005.1A | Seal | | 1 |
| 27 | 713.1.128.1B | Spacer | | 1 |
| 28 | 930.5.006.2B | Mechanical seal | | 1 |
| 29 | 251.2.008.1A | Water pump fan | | 1 |
| 30 | 852.5.023.1A | Gasket | | 1 |
| 31 | 247.2.130.1AC | Complete water pump cover (BLACK) | | 1 |
| 32 | 852.5.024.1A | Gasket th.1 | | 1 |
| 33 | 780.5.001.1A | Cap | | 1 |
| 34 | 852.1.114.1A | Washer | | 1 |
| 35 | 830.1.235.1A | Bracket | | 1 |
| 36 | 771.1.051.8B | Screw | | 1 |
| 37 | 264.4.053.2A | Rotor "KOKUSAN" | | 1 |



CATALOGUE No: 915.1.289.1B
ISSUED: 04 - 09

DRAWING 012 Electric starting and ignition

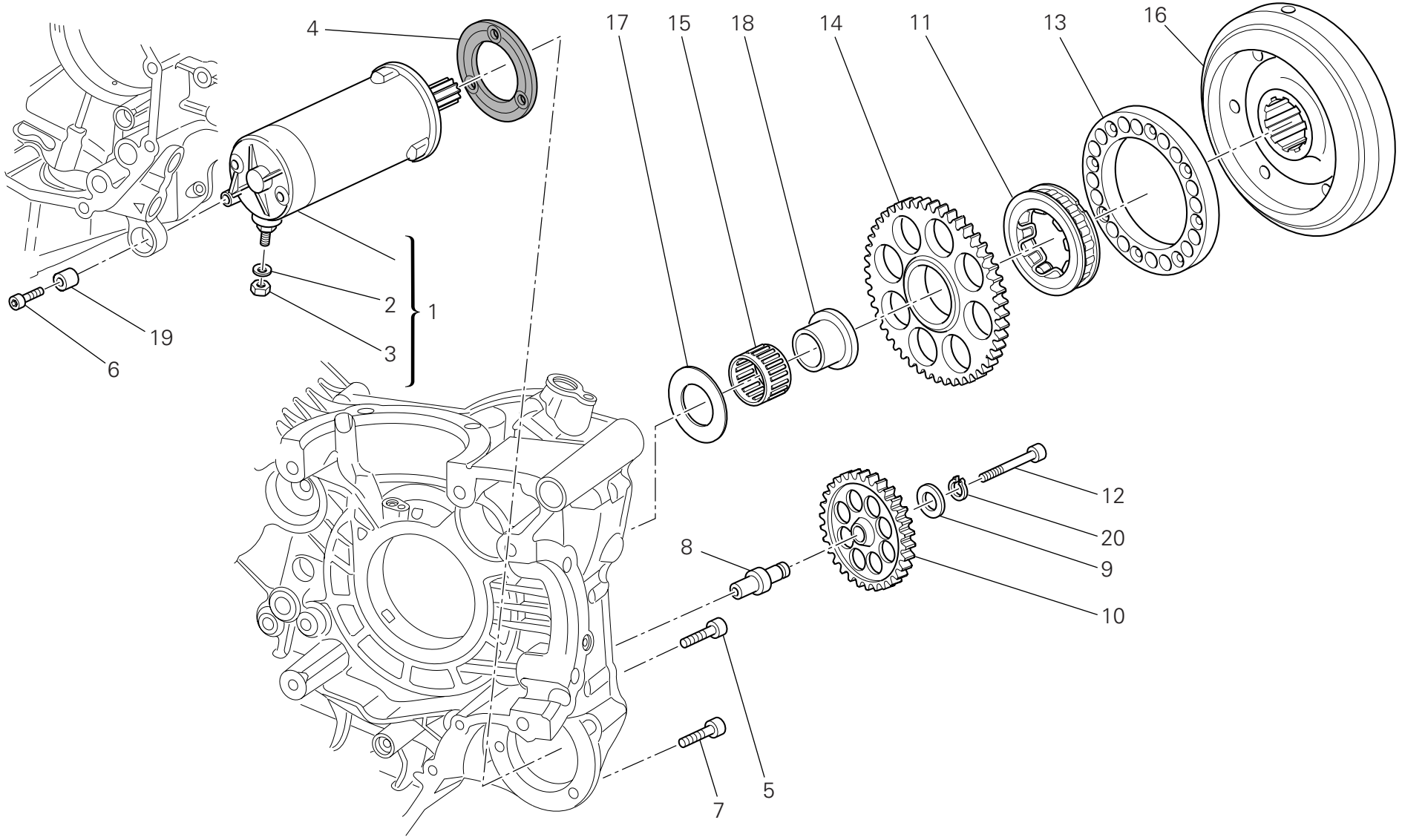

DRAWING 012 Electric starting and ignition

| NOTES NO. | CODE NO. | DESCRIPTION | VALIDITY | Q.TY |
|---|---|---|---|---|
| 1 | 270.4.010.1A | Complete starter motor | | 1 |
| 2 | 853.1.003.1A | Spring washer | | 1 |
| 3 | 750.1.121.1A | Nut | | 1 |
| 4 | 788.1.054.2A | Starter motor gasket | | 1 |
| 5 | 771.1.049.1A | Screw | | 2 |
| 6 | 771.1.052.1A | Screw | | 1 |
| 7 | 771.5.069.8B | Screw | | 1 |
| 8 | 821.1.309.3A | Intermediate gear pin | | 1 |
| 9 | 856.1.071.1A | Washer | | 1 |
| 10 | 176.1.020.1A | Intermediate gear assembly | | 1 |
| 11 | 701.4.023.1A | Starter clutch | | 1 |
| 12 | 771.5.078.8B | Screw | | 1 |
| 13 | 160.1.370.1A | Flange | | 1 |
| 14 | 173.1.022.1A | Electric starter driven gear | | 1 |
| 15 | 702.4.018.1A | Needle bearing | | 1 |
| 16 | 276.1.038.2A | Ignition flywheel | | 1 |
| 17 | 856.1.075.1A | Shim | | 1 |
| 18 | 881.1.034.1A | Inner ring | | 1 |
| 19 | 700.1.036.1A | Flexible bush | | 1 |
| 20 | 73500.1440 | Circlip | | 1 |

| NOTES NO. | CODE NO. | DESCRIPTION | VALIDITY | Q.TY |
|---|---|---|---|---|



CATALOGUE No: 915.1.289.1B
ISSUED: 04 - 09

DRAWING 013 Cylinder head : timing system

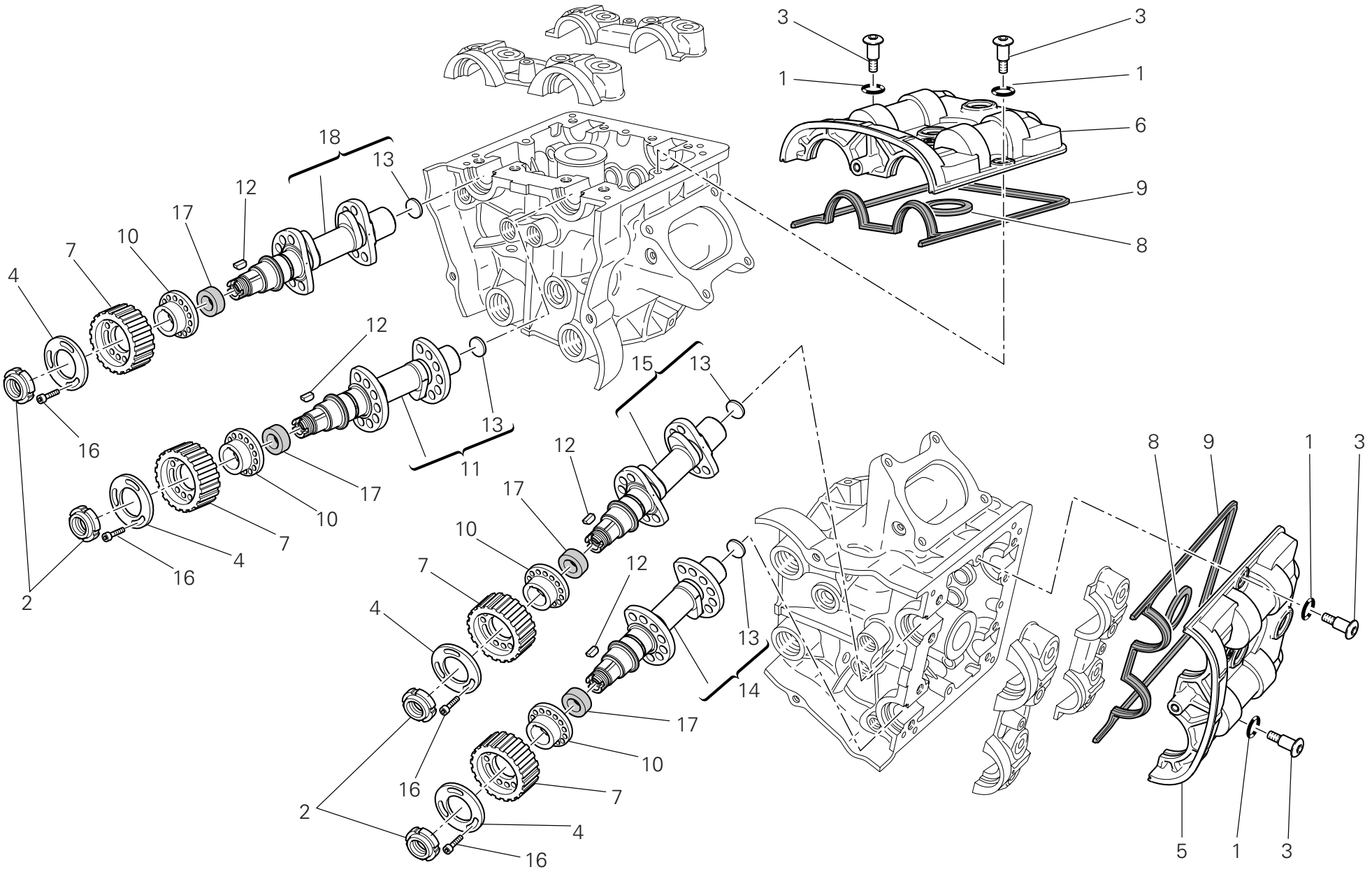

DRAWING 013 Cylinder head : timing system

| NOTES NO. | CODE NO. | DESCRIPTION | VALIDITY | Q.TY |
|---|---|---|---|---|
| 1 | 886.5.051.1A | O-ring | | 8 |
| 2 | 703.5.002.2A | Ring nut | | 4 |
| 3 | 779.1.509.2A | Special screw | | 8 |
| 4 | 856.1.074.2A | Special washer | | 4 |
| 5 | 247.1.287.1B | Horizontal cover | | 1 |
| 6 | 247.1.288.1B | Vertical cover | | 1 |
| 7 | 255.1.019.3A | Timing belt roller | | 4 |
| 8 | 788.1.094.1A | Gasket | | 2 |
| 9 | 788.1.093.1A | Head gasket | | 2 |
| 10 | 160.1.094.1A | Spacer | | 4 |
| 11 | 148.2.307.2A | Vertical intake camshaft | | 1 |
| 12 | 680.5.006.1A | Woodruff key | | 4 |
| 13 | 873.1.005.1A | Cap | | 4 |
| 14 | 148.2.308.2A | Horizontal exhaust camshaft | | 1 |
| 15 | 148.2.306.2A | Horizontal intake camshaft | | 1 |
| 16 | 779.5.030.2A | Screw | | 12 |
| 17 | 930.5.007.1A | Seal ring | | 4 |
| 18 | 148.2.309.2A | Vertical exhaust camshaft | | 1 |

| NOTES NO. | CODE NO. | DESCRIPTION | VALIDITY | Q.TY |
|---|---|---|---|---|



CATALOGUE No: 915.1.289.1B
ISSUED: 04 - 09

DRAWING 014 Vertical cylinder head

| 1<br>Registro bilanc. apertura<br>Adjustment<br>Réglage<br>Ventilkäppchen | 2<br>Registro bilanc. chiusura<br>Adjustment<br>Réglage<br>Ventilkäppchen |
|---|---|
| 840.1.031.1A - 1,8 | 840.1.041.2B - 2,2 |
| 840.1.032.1A - 1,85 | 840.1.042.2B - 2,25 |
| 840.1.033.1A - 1,9 | 840.1.043.2B - 2,3 |
| 840.1.034.1A - 1,95 | 840.1.044.2B - 2,35 |
| 840.1.001.1A - 2,0 | 840.1.045.2B - 2,4 |
| 840.1.002.1A - 2,05 | 840.1.046.2B - 2,45 |
| 840.1.003.1A - 2,1 | 840.1.047.2B - 2,5 |
| 840.1.004.1A - 2,15 | 840.1.048.2B - 2,55 |
| 840.1.005.1A - 2,2 | 840.1.049.2B - 2,6 |
| 840.1.006.1A - 2,25 | 840.1.050.2B - 2,65 |
| 840.1.007.1A - 2,3 | 840.1.051.2B - 2,7 |
| 840.1.008.1A - 2,35 | 840.1.052.2B - 2,75 |
| 840.1.009.1A - 2,4 | 840.1.053.2B - 2,8 |
| 840.1.010.1A - 2,45 | 840.1.054.2B - 2,85 |
| 840.1.011.1A - 2,5 | 840.1.055.2B - 2,9 |
| 840.1.012.1A - 2,55 | 840.1.056.2B - 2,95 |
| 840.1.013.1A - 2,6 | 840.1.057.2B - 3,0 |
| 840.1.014.1A - 2,65 | 840.1.058.2B - 3,05 |
| 840.1.015.1A - 2,7 | 840.1.059.2B - 3,1 |
| 840.1.016.1A - 2,75 | 840.1.060.2B - 3,15 |
| 840.1.017.1A - 2,8 | 840.1.061.2B - 3,2 |
| 840.1.018.1A - 2,85 | 840.1.062.2B - 3,25 |
| 840.1.019.1A - 2,9 | 840.1.063.2B - 3,3 |
| 840.1.020.1A - 2,95 | 840.1.064.2B - 3,35 |
| 840.1.021.1A - 3,0 | 840.1.065.2B - 3,4 |
| 840.1.022.1A - 3,05 | 840.1.066.2B - 3,45 |
| 840.1.023.1A - 3,1 | 840.1.067.2B - 3,5 |
| 840.1.024.1A - 3,15 | 840.1.068.2B - 3,55 |
| 840.1.025.1A - 3,2 | 840.1.069.2B - 3,6 |
| 840.1.026.1A - 3,25 | 840.1.070.2B - 3,65 |
| 840.1.027.1A - 3,3 | 840.1.071.2B - 3,7 |
| 840.1.028.1A - 3,35 | 840.1.072.2B - 3,75 |
| 840.1.029.1A - 3,4 | 840.1.073.2B - 3,8 |
| 840.1.030.1A - 3,45 | 840.1.074.2B - 3,85 |
| | 840.1.075.2B - 3,9 |
| | 840.1.076.2B - 3,95 |
| | 840.1.077.2B - 4,0 |
| | 840.1.078.2B - 4,05 |
| | 840.1.079.2B - 4,1 |
| | 840.1.080.2B - 4,15 |
| | 840.1.081.2B - 4,2 |
| | 840.1.082.2B - 4,25 |
| | 840.1.083.2B - 4,3 |
| | 840.1.084.2B - 4,35 |
| | 840.1.085.2B - 4,4 |
| | 840.1.086.2B - 4,45 |
| | 840.1.087.2B - 4,5 |

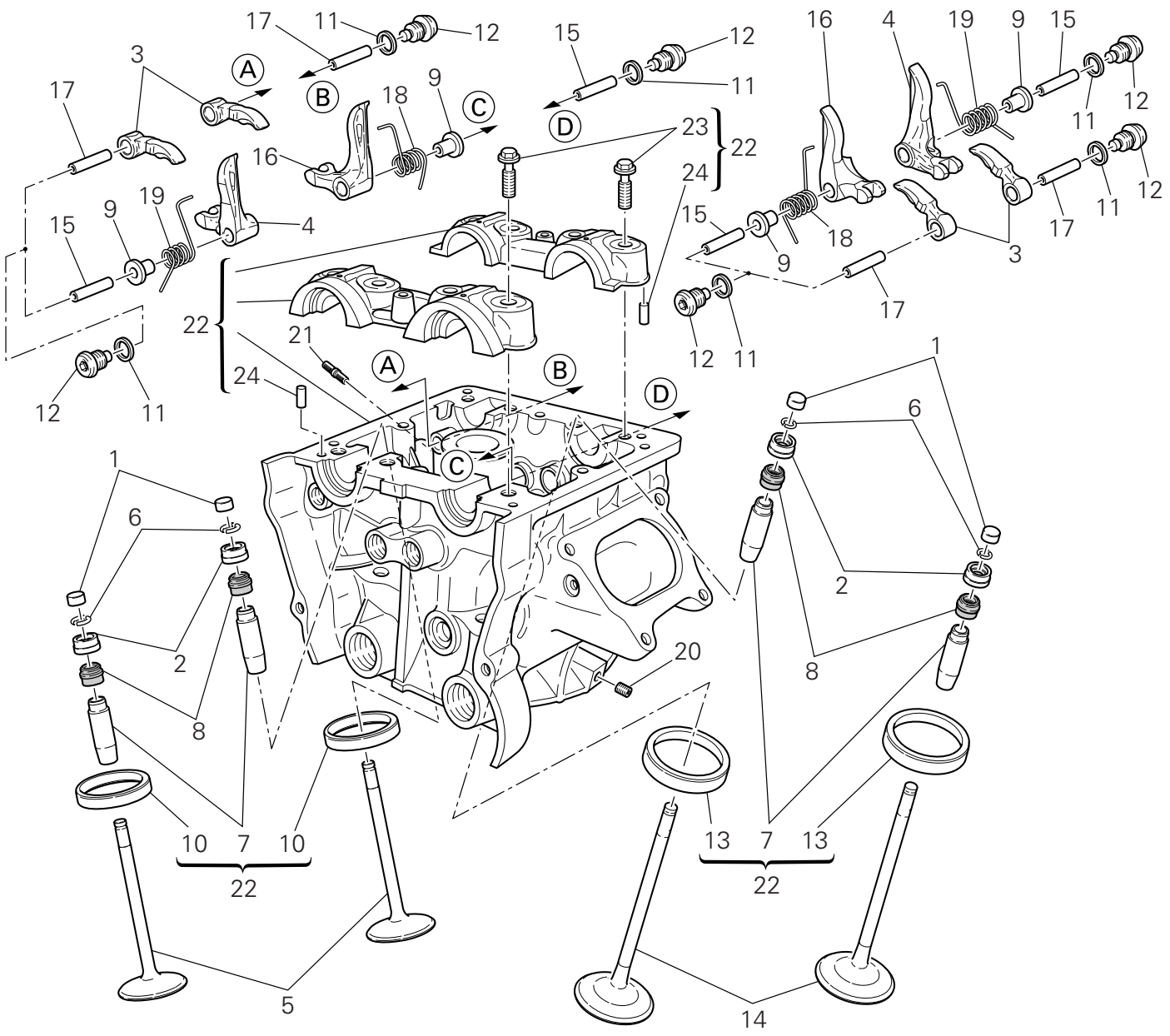

DRAWING 014 Vertical cylinder head

| NOTES NO. | CODE NO. | DESCRIPTION | VALIDITY | Q.TY |
|---|---|---|---|---|
| 1 | 840.2.001.1A | See table | | 4 |
| 2 | 840.2.002.2B | See table | | 4 |
| 3 | 208.1.029.1A | Opening rocker | | 4 |
| 4 | 209.1.036.1A | Closing rocker (L.H.) | | 2 |
| 5 | 211.1.070.1B | Exhaust valve | | 2 |
| 6 | 669.1.001.1E | Split rings | | 8 |
| 7 | 303.1.051.1BB | Oversize valve guide 0.03 | | 4 |
| 7 | 303.1.051.1BC | Oversize valve guide 0.06 | | 4 |
| 7 | 303.1.051.1BD | Oversize valve guide 0.09 | | 4 |
| 8 | 764.1.087.1A | Valve seal | | 4 |
| 9 | 713.1.292.1A | Spacer | | 4 |
| 10 | 304.1.063.1A | Exhaust valve seat | | 2 |
| 10 | 304.1.063.1AB | Oversize exhaust valve seat 0.03 | | 2 |
| 10 | 304.1.063.1AC | Oversize exhaust valve seat 0.06 | | 2 |
| 11 | 852.5.026.1B | Aluminium gasket th.1,5 | | 8 |
| 12 | 780.1.051.1A | Cap | | 8 |
| 13 | 304.1.064.1B | Intake valve seat | | 2 |
| 13 | 304.1.064.1BB | Oversize intake valve seat 0.03 | | 2 |
| 13 | 304.1.064.1BC | Oversize intake valve seat 0.06 | | 2 |
| 14 | 210.1.072.1A | Intake valve | | 2 |
| 15 | 821.1.223.1B | Closing rocker shaft | | 4 |
| 16 | 209.1.035.1A | Closing rocker (R.H.) | | 2 |
| 17 | 821.1.222.1B | Opening rocker shaft | | 4 |
| 18 | 799.1.486.1A | Valve return spring (R.H.) | | 2 |
| 19 | 799.1.485.1A | Valve return spring (L.H.) | | 2 |
| 20 | 417.6.011.3A | Threaded dowel | | 1 |
| 21 | 766.4.019.1A | Stud bolt | | 3 |
| 22 | 301.2.239.4BB | Complete vertical head | | 1 |
| 23 | 779.1.421.1A | Special screw | | 8 |
| 24 | 860.5.006.1A | Pin | | 4 |



CATALOGUE No: 915.1.289.1B
ISSUED: 04 - 09

DRAWING 015 Horizontal cylinder head

| 1<br>Registro bilanc. apertura<br>Adjustment<br>Réglage<br>Ventilkäppchen | 2<br>Registro bilanc. chiusura<br>Adjustment<br>Réglage<br>Ventilkäppchen |
|---|---|
| 840.1.031.1A - 1,8 | 840.1.041.2B - 2,2 |
| 840.1.032.1A - 1,85 | 840.1.042.2B - 2,25 |
| 840.1.033.1A - 1,9 | 840.1.043.2B - 2,3 |
| 840.1.034.1A - 1,95 | 840.1.044.2B - 2,35 |
| 840.1.001.1A - 2,0 | 840.1.045.2B - 2,4 |
| 840.1.002.1A - 2,05 | 840.1.046.2B - 2,45 |
| 840.1.003.1A - 2,1 | 840.1.047.2B - 2,5 |
| 840.1.004.1A - 2,15 | 840.1.048.2B - 2,55 |
| 840.1.005.1A - 2,2 | 840.1.049.2B - 2,6 |
| 840.1.006.1A - 2,25 | 840.1.050.2B - 2,65 |
| 840.1.007.1A - 2,3 | 840.1.051.2B - 2,7 |
| 840.1.008.1A - 2,35 | 840.1.052.2B - 2,75 |
| 840.1.009.1A - 2,4 | 840.1.053.2B - 2,8 |
| 840.1.010.1A - 2,45 | 840.1.054.2B - 2,85 |
| 840.1.011.1A - 2,5 | 840.1.055.2B - 2,9 |
| 840.1.012.1A - 2,55 | 840.1.056.2B - 2,95 |
| 840.1.013.1A - 2,6 | 840.1.057.2B - 3,0 |
| 840.1.014.1A - 2,65 | 840.1.058.2B - 3,05 |
| 840.1.015.1A - 2,7 | 840.1.059.2B - 3,1 |
| 840.1.016.1A - 2,75 | 840.1.060.2B - 3,15 |
| 840.1.017.1A - 2,8 | 840.1.061.2B - 3,2 |
| 840.1.018.1A - 2,85 | 840.1.062.2B - 3,25 |
| 840.1.019.1A - 2,9 | 840.1.063.2B - 3,3 |
| 840.1.020.1A - 2,95 | 840.1.064.2B - 3,35 |
| 840.1.021.1A - 3,0 | 840.1.065.2B - 3,4 |
| 840.1.022.1A - 3,05 | 840.1.066.2B - 3,45 |
| 840.1.023.1A - 3,1 | 840.1.067.2B - 3,5 |
| 840.1.024.1A - 3,15 | 840.1.068.2B - 3,55 |
| 840.1.025.1A - 3,2 | 840.1.069.2B - 3,6 |
| 840.1.026.1A - 3,25 | 840.1.070.2B - 3,65 |
| 840.1.027.1A - 3,3 | 840.1.071.2B - 3,7 |
| 840.1.028.1A - 3,35 | 840.1.072.2B - 3,75 |
| 840.1.029.1A - 3,4 | 840.1.073.2B - 3,8 |
| 840.1.030.1A - 3,45 | 840.1.074.2B - 3,85 |
| | 840.1.075.2B - 3,9 |
| | 840.1.076.2B - 3,95 |
| | 840.1.077.2B - 4,0 |
| | 840.1.078.2B - 4,05 |
| | 840.1.079.2B - 4,1 |
| | 840.1.080.2B - 4,15 |
| | 840.1.081.2B - 4,2 |
| | 840.1.082.2B - 4,25 |
| | 840.1.083.2B - 4,3 |
| | 840.1.084.2B - 4,35 |
| | 840.1.085.2B - 4,4 |
| | 840.1.086.2B - 4,45 |
| | 840.1.087.2B - 4,5 |

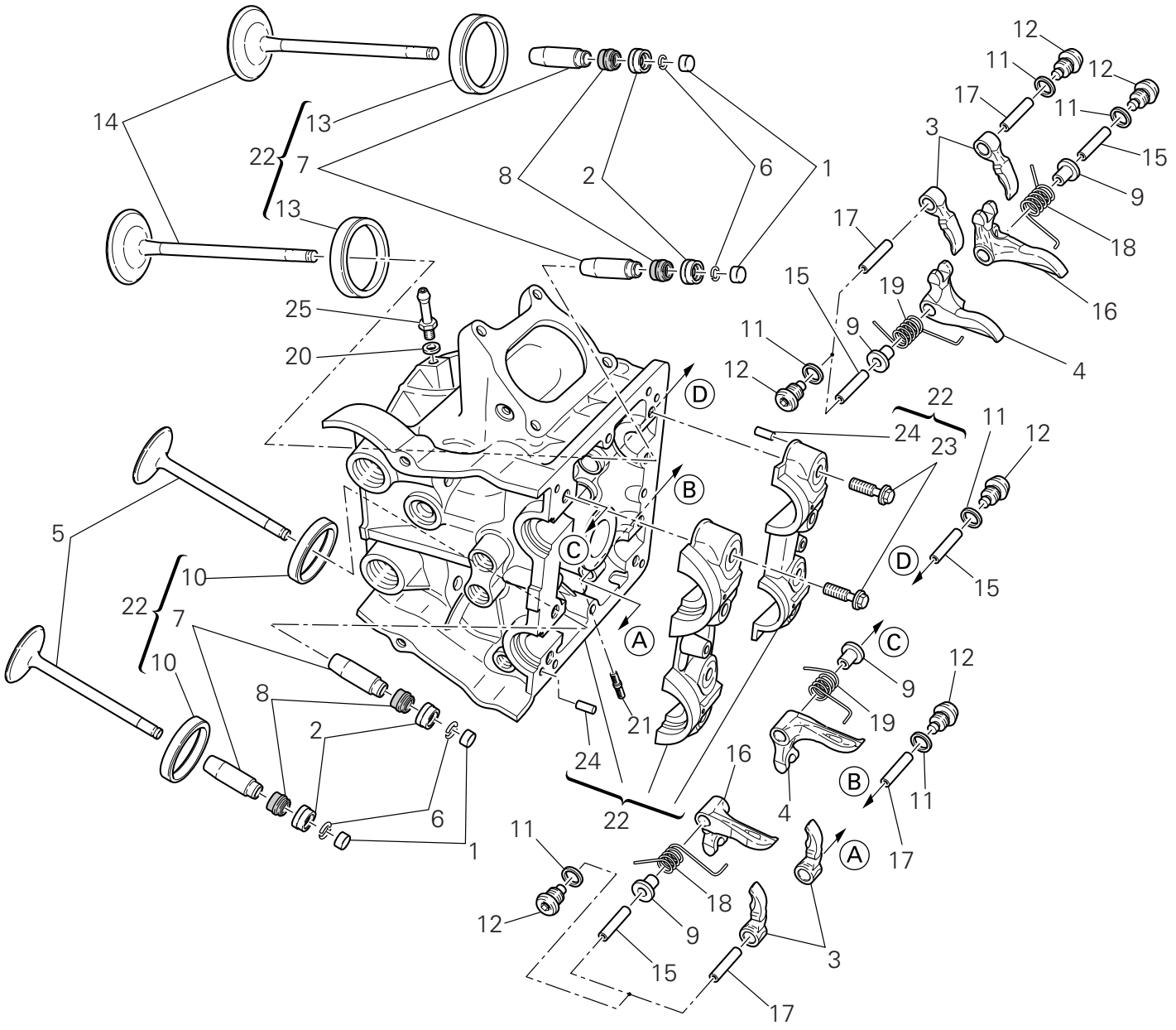

DRAWING 015 Horizontal cylinder head

| NOTES NO. | CODE NO. | DESCRIPTION | VALIDITY | Q.TY |
|---|---|---|---|---|
| 1 | 840.2.001.1A | See table | | 4 |
| 2 | 840.2.002.2B | See table | | 4 |
| 3 | 208.1.029.1A | Opening rocker | | 4 |
| 4 | 209.1.036.1A | Closing rocker (L.H.) | | 2 |
| 5 | 211.1.070.1B | Exhaust valve | | 2 |
| 6 | 669.1.001.1E | Split rings | | 8 |
| 7 | 303.1.051.1BB | Oversize valve guide 0.03 | | 4 |
| 7 | 303.1.051.1BC | Oversize valve guide 0.06 | | 4 |
| 7 | 303.1.051.1BD | Oversize valve guide 0.09 | | 4 |
| 8 | 764.1.087.1A | Valve seal | | 4 |
| 9 | 713.1.292.1A | Spacer | | 4 |
| 10 | 304.1.063.1A | Exhaust valve seat | | 2 |
| 10 | 304.1.063.1AB | Oversize exhaust valve seat 0.03 | | 2 |
| 10 | 304.1.063.1AC | Oversize exhaust valve seat 0.06 | | 2 |
| 11 | 852.5.026.1B | Aluminium gasket th.1,5 | | 8 |
| 12 | 780.1.051.1A | Cap | | 8 |
| 13 | 304.1.064.1B | Intake valve seat | | 2 |
| 13 | 304.1.064.1BB | Oversize intake valve seat 0.03 | | 2 |
| 13 | 304.1.064.1BC | Oversize intake valve seat 0.06 | | 2 |
| 14 | 210.1.072.1A | Intake valve | | 2 |
| 15 | 821.1.223.1B | Closing rocker shaft | | 4 |
| 16 | 209.1.035.1A | Closing rocker (R.H.) | | 2 |
| 17 | 821.1.222.1B | Opening rocker shaft | | 4 |
| 18 | 799.1.486.1A | Valve return spring (R.H.) | | 2 |
| 19 | 799.1.485.1A | Valve return spring (L.H.) | | 2 |
| 20 | 852.5.023.1A | Gasket | | 1 |
| 21 | 766.4.019.1A | Stud bolt | | 3 |
| 22 | 301.2.238.4BB | Complete horizontal head | | 1 |
| 23 | 779.1.421.1A | Special screw | | 8 |
| 24 | 860.5.006.1A | Pin | | 4 |
| 25 | 814.1.188.1A | Union | | 1 |



CATALOGUE No: 915.1.289.1B
ISSUED: 04 - 09

DRAWING 016 Heat exchanger

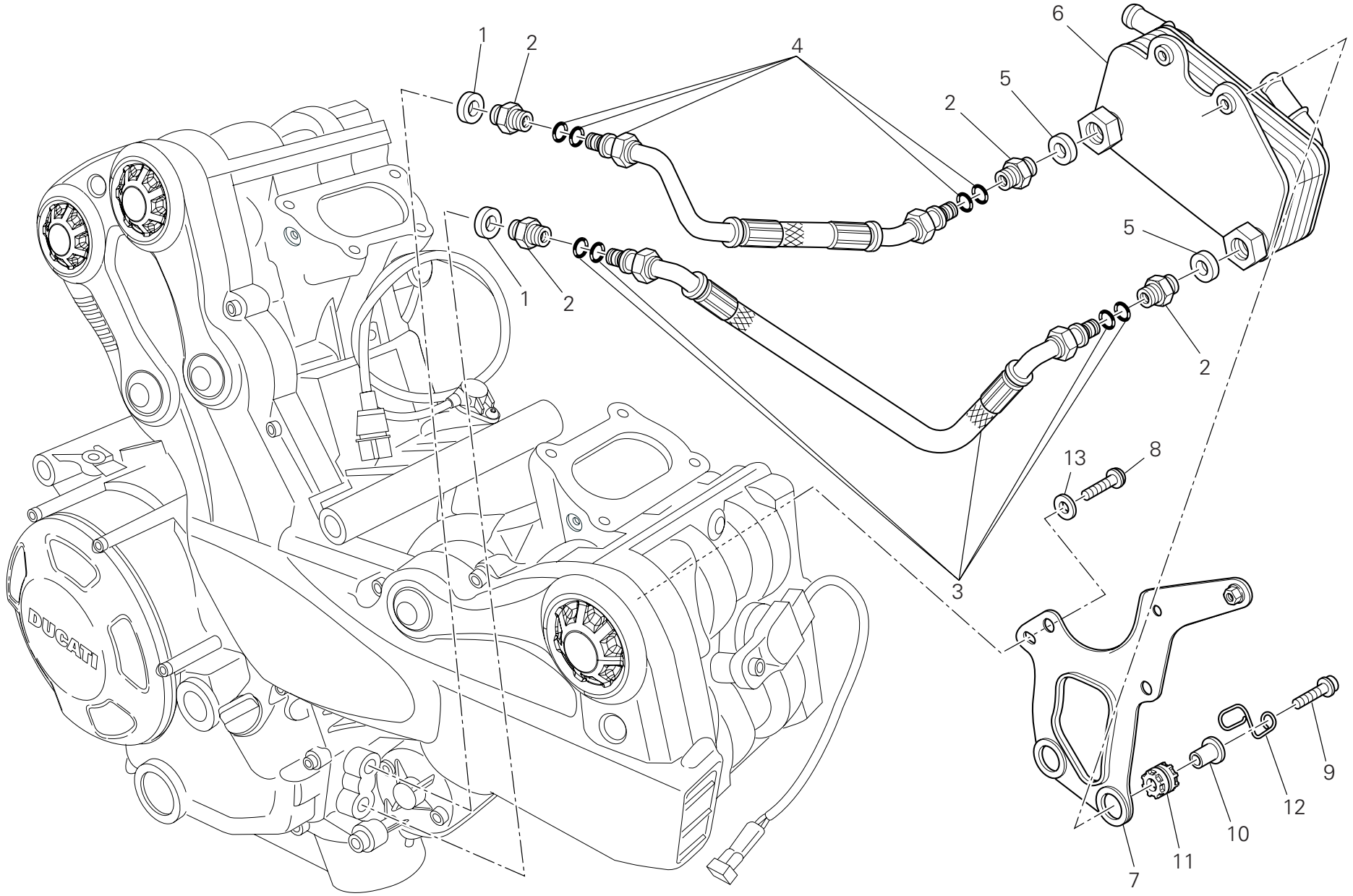

DRAWING 016 Heat exchanger

| NOTES NO. | CODE NO. | DESCRIPTION | VALIDITY | Q.TY |
|---|---|---|---|---|
| 1 | 787.1.011.1A | Aluminium gasket th.2 | | 2 |
| 2 | 815.1.022.1A | Nipple | | 4 |
| 3 | 549.1.090.1A | Oil delivery pipe | | 1 |
| 4 | 549.1.091.1A | Oil return pipe | | 1 |
| 5 | 420.2.006.4A | Aluminium gasket | | 2 |
| 6 | 547.1.001.1A | Heat exchanger | | 1 |
| 7 | 830.1.530.1A | Bracket | | 1 |
| 8 | 772.1.089.3B | Screw | | 2 |
| 9 | 771.5.663.8B | Screw | | 2 |
| 10 | 716.1.003.1A | Spacer | | 2 |
| 11 | 764.1.022.1A | Vibration damper pad | | 2 |
| 12 | 881.1.058.1A | Cable guide | | 1 |
| 13 | 852.1.176.1A | Washer | | 2 |

| NOTES NO. | CODE NO. | DESCRIPTION | VALIDITY | Q.TY |
|---|---|---|---|---|



CATALOGUE No: 915.1.289.1B
ISSUED: 04 - 09

DRAWING 017 Throttle body

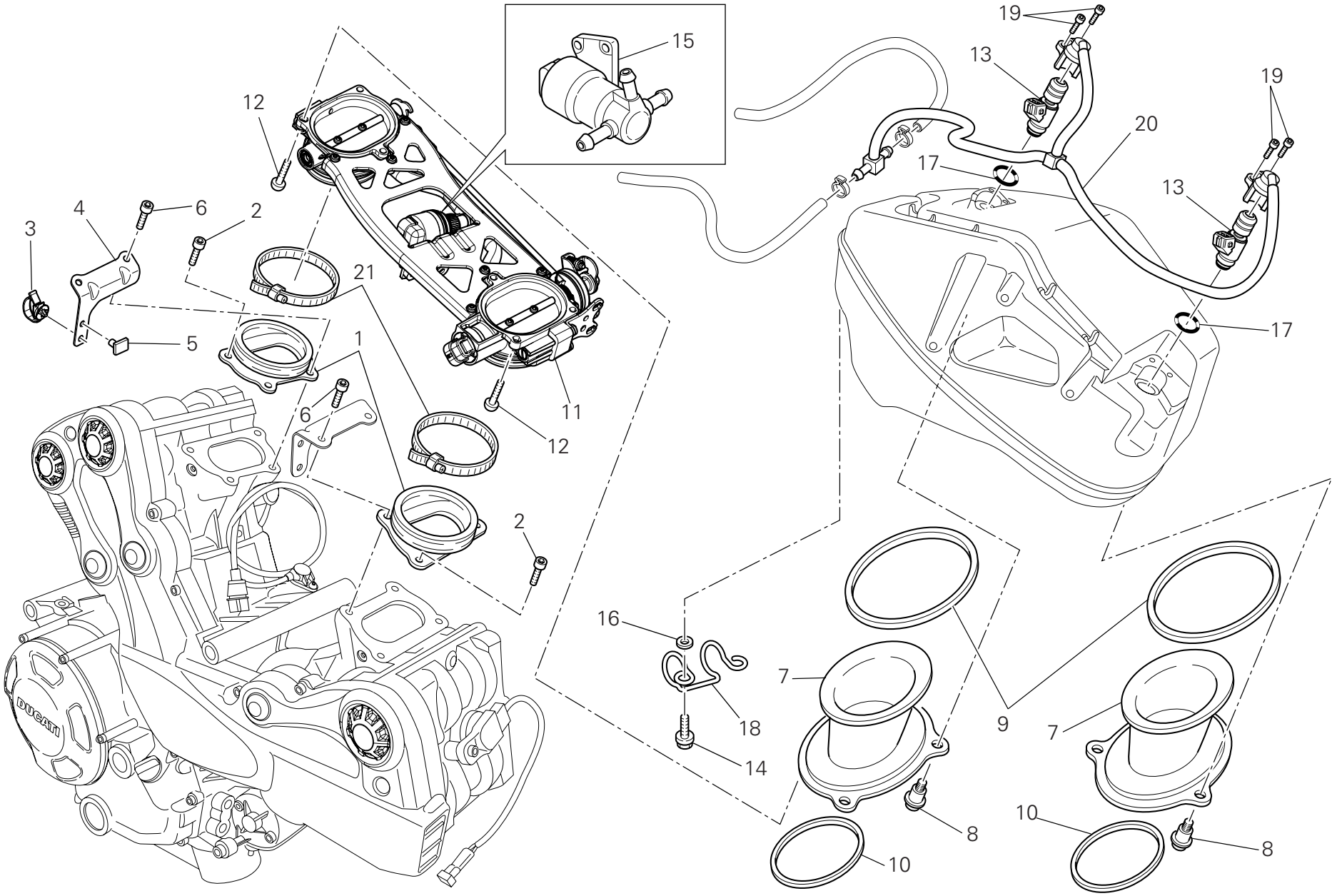

DRAWING 017 Throttle body

| NOTES NO. | CODE NO. | DESCRIPTION | VALIDITY | Q.TY |
|---|---|---|---|---|
| 1 | 140.1.048.1B | Intake manifold | | 2 |
| 2 | 771.5.065.8B | Screw | | 4 |
| 3 | 758.4.017.1A | Clamp | | 2 |
| 4 | 827.1.543.1A | Cable keep plate | | 1 |
| 5 | 850.4.043.1A | Quik fastening | | 1 |
| 6 | 771.1.233.1A | Screw | | 4 |
| 7 | 135.1.023.2A | Intake duct | | 2 |
| 8 | 772.1.085.2A | Special screw | | 6 |
| 9 | 788.1.096.2A | Gasket | | 2 |
| 10 | 788.1.097.2A | Gasket | | 2 |
| 11 | 282.4.079.1B | Complete throttle body | | 1 |
| 12 | 775.1.017.1C | Screw | | 6 |
| 13 | 280.4.016.1A | Injector | | 2 |
| 14 | 772.1.110.1A | Screw | | 2 |
| 15 | 283.4.024.1A | Stepper motor | | 1 |
| 16 | 852.4.013.1A | Washer | | 2 |
| 17 | 886.4.089.1A | O-ring | | 2 |
| 18 | 758.1.039.2A | Hose guide | | 1 |
| 19 | 773.1.005.1A | Screw | | 4 |
| 20 | 590.2.026.1A | Complete pipe set | | 1 |
| 21 | 741.4.189.1A | Clamp | | 2 |

| NOTES NO. | CODE NO. | DESCRIPTION | VALIDITY | Q.TY |
|---|---|---|---|---|



CATALOGUE No: 915.1.289.1B
ISSUED: 04 - 09

DRAWING 018 Battery support

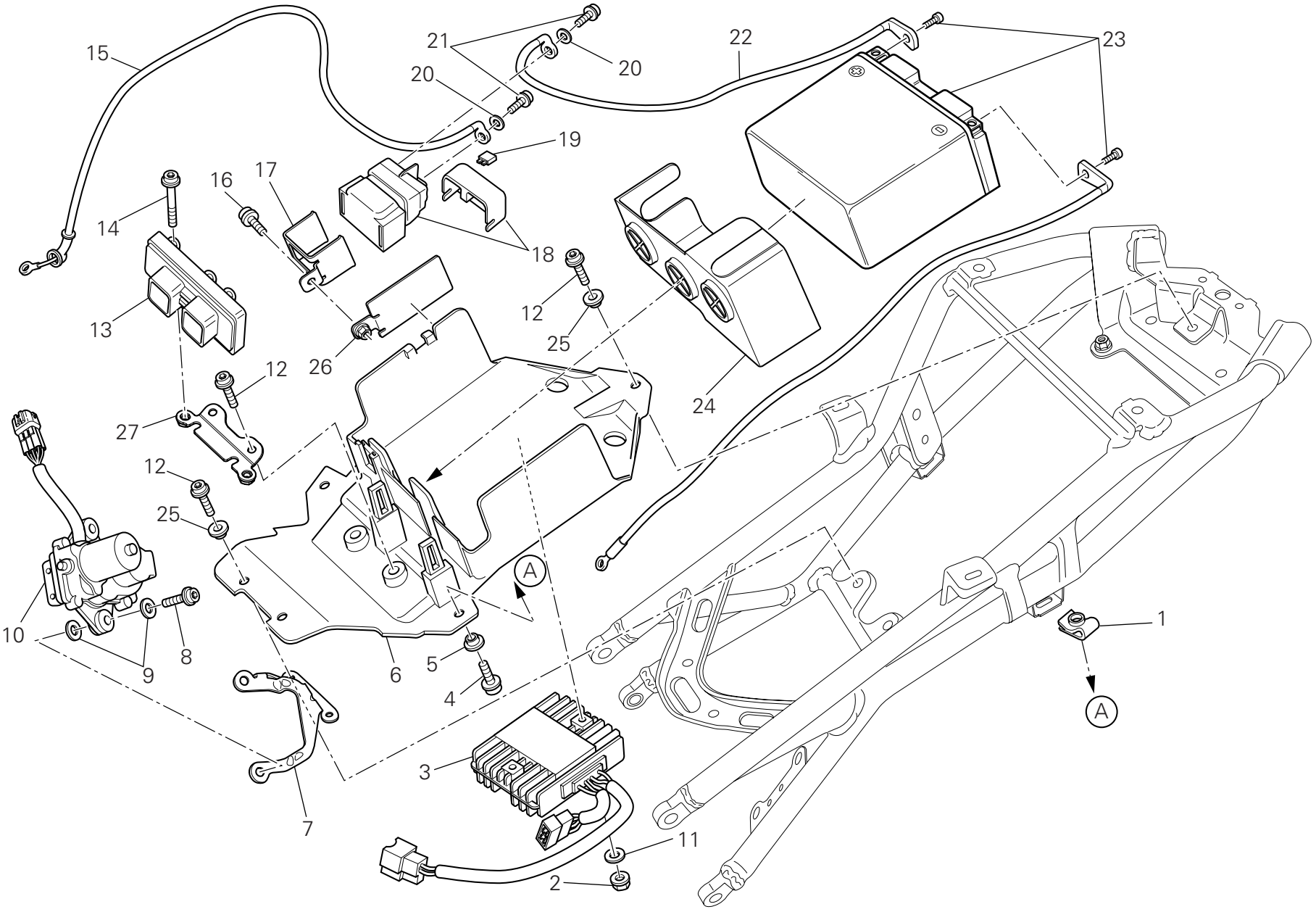

DRAWING 018 Battery support

| NOTES NO. | CODE NO. | DESCRIPTION | VALIDITY | Q.TY |
|---|---|---|---|---|
| 1 | 850.4.055.1A | Quik fastening | | 2 |
| 2 | 750.5.001.1B | Nut | | 2 |
| 3 | 540.4.019.1A | Regulator | | 1 |
| 4 | 771.5.639.8B | Screw | | 2 |
| 5 | 716.1.407.1A | Spacer | | 2 |
| 6 | 829.1.985.2A | Battery box mount | | 1 |
| 7 | 830.1.544.1A | Bracket | | 1 |
| 8 | 771.5.668.8B | Screw | | 2 |
| 9 | 852.5.009.1A | Washer | | 4 |
| 10 | 593.4.030.1A | Exhaust valve engine | | 1 |
| 11 | 852.1.160.1B | Washer | | 2 |
| 12 | 771.1.369.1A | Screw | | 5 |
| USA 13 | 286.4.174.1C | Injection control unit | | 1 |
| CDN 13 | 286.4.174.1D | Injection control unit | | 1 |
| 14 | 771.5.672.8B | Screw | | 2 |
| 15 | 514.1.062.1A | Solenoid starter - starter motor cable | | 1 |
| 16 | 772.1.046.1B | Screw | | 1 |
| 17 | 830.1.549.1A | Plate | | 1 |
| 18 | 397.4.007.1A | Remote switch | | 1 |
| 19 | 389.4.023.1A | Fuse 30A | | 2 |
| 20 | 853.5.010.1A | Spring washer | | 2 |
| 21 | 771.5.662.8B | Screw | | 2 |
| 22 | 514.1.063.1A | Battery - solenoid starter cable | | 1 |
| 23 | 395.2.013.1C | Battery | | 1 |
| 24 | 866.1.098.1A | Battery carpet | | 1 |
| 25 | 716.1.401.1A | Spacer | | 3 |
| 26 | 830.1.550.1A | Plate | | 1 |

| NOTES NO. | CODE NO. | DESCRIPTION | VALIDITY | Q.TY |
|---|---|---|---|---|
| 27 | 830.1.556.1A | Holder | | 1 |



CATALOGUE No: 915.1.289.1B
ISSUED: 04 - 09

DRAWING 018a Electrical system

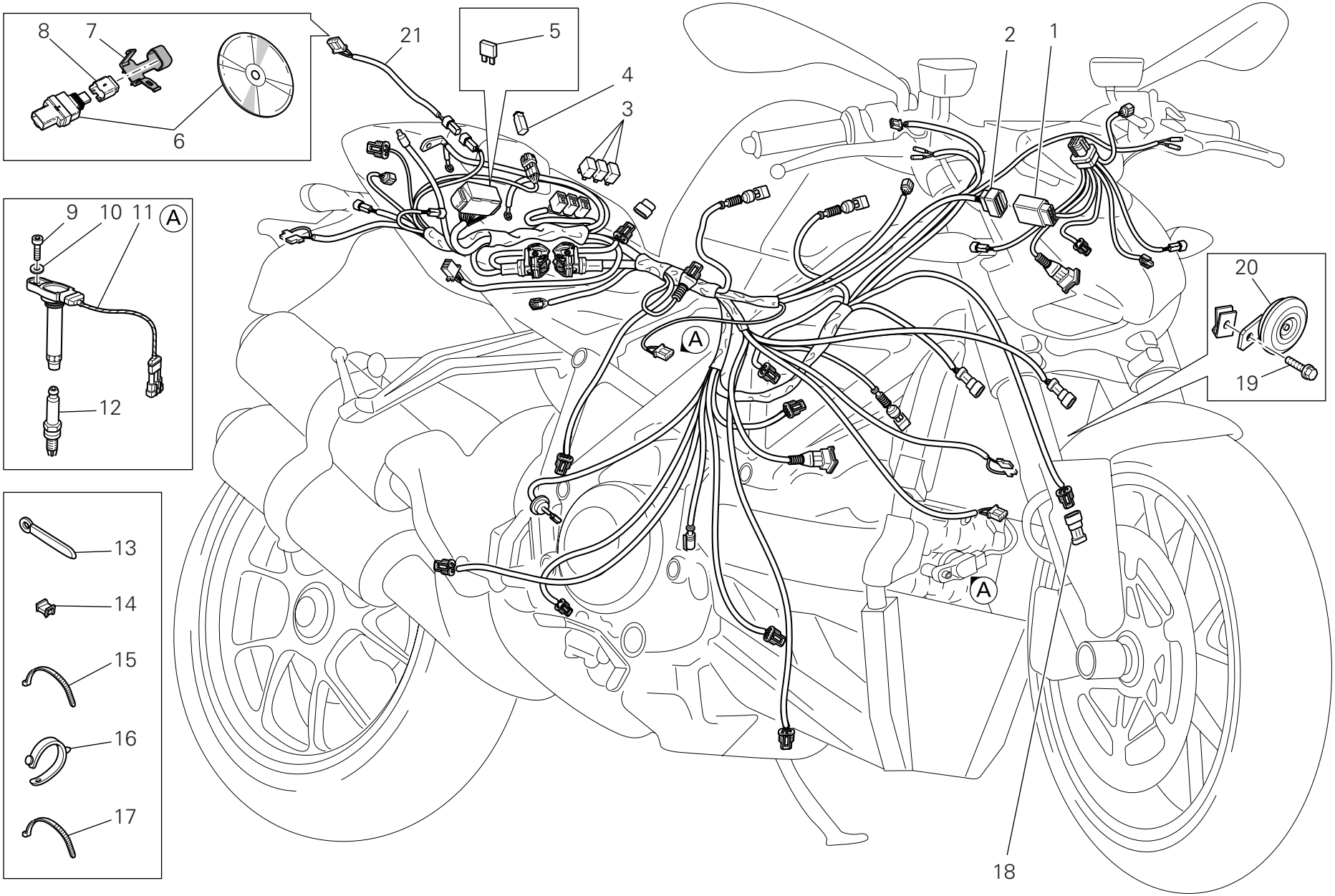

DRAWING 018a Electrical system

| NOTES NO. | CODE NO. | DESCRIPTION | VALIDITY | Q.TY |
|---|---|---|---|---|
| 1 | 510.1.694.1B | Electric wiring | | 1 |
| 2 | 510.1.662.1B | Electric wiring | | 1 |
| 3 | 541.4.010.1A | Relay | | 3 |
| 4 | 872.1.063.1A | Cap (DTC) | | 1 |
| 5 | 389.4.019.1A | Fuse 5A | | 2 |
| 5 | 389.4.020.1A | Fuse 10A | | 1 |
| 5 | 389.4.021.1A | Fuse 15A | | 1 |
| 5 | 389.4.022.1A | Fuse 20A | | 1 |
| 5 | 389.4.024.1A | Fuse 7.5A | | 1 |
| 6 | 286.2.040.1B | Data acquisition kit | | 1 |
| 7 | 741.1.040.1A | Clamp | | 1 |
| 8 | 872.1.053.1A | Cap (DDA) | | 1 |
| 9 | 771.5.066.8B | Screw | | 2 |
| 10 | 852.1.176.1A | Washer | | 2 |
| 11 | 380.1.014.5B | Coil | | 2 |
| 12 | 670.4.038.1A | Spark plug | | 2 |
| 13 | 741.4.193.1A | Clamp | | 1 |
| 14 | 850.4.067.1A | Clamp | | 8 |
| 15 | 741.4.038.1A | Hose guide | | 7 |
| 16 | 8000.53724 | Hose guide | | 4 |
| 17 | 0691.91.030 | Hose guide | | 6 |
| 18 | 872.1.062.1A | Cap (Speed sensor) (front) | | 1 |
| 19 | 772.1.050.1C | Screw | | 1 |
| 20 | 516.4.004.2B | Horn | | 1 |
| 21 | 510.1.570.1A | Data acquisition cable | | 1 |

| NOTES NO. | CODE NO. | DESCRIPTION | VALIDITY | Q.TY |
|---|---|---|---|---|



CATALOGUE No: 915.1.289.1B
ISSUED: 04 - 09

DRAWING 019 Exhaust system

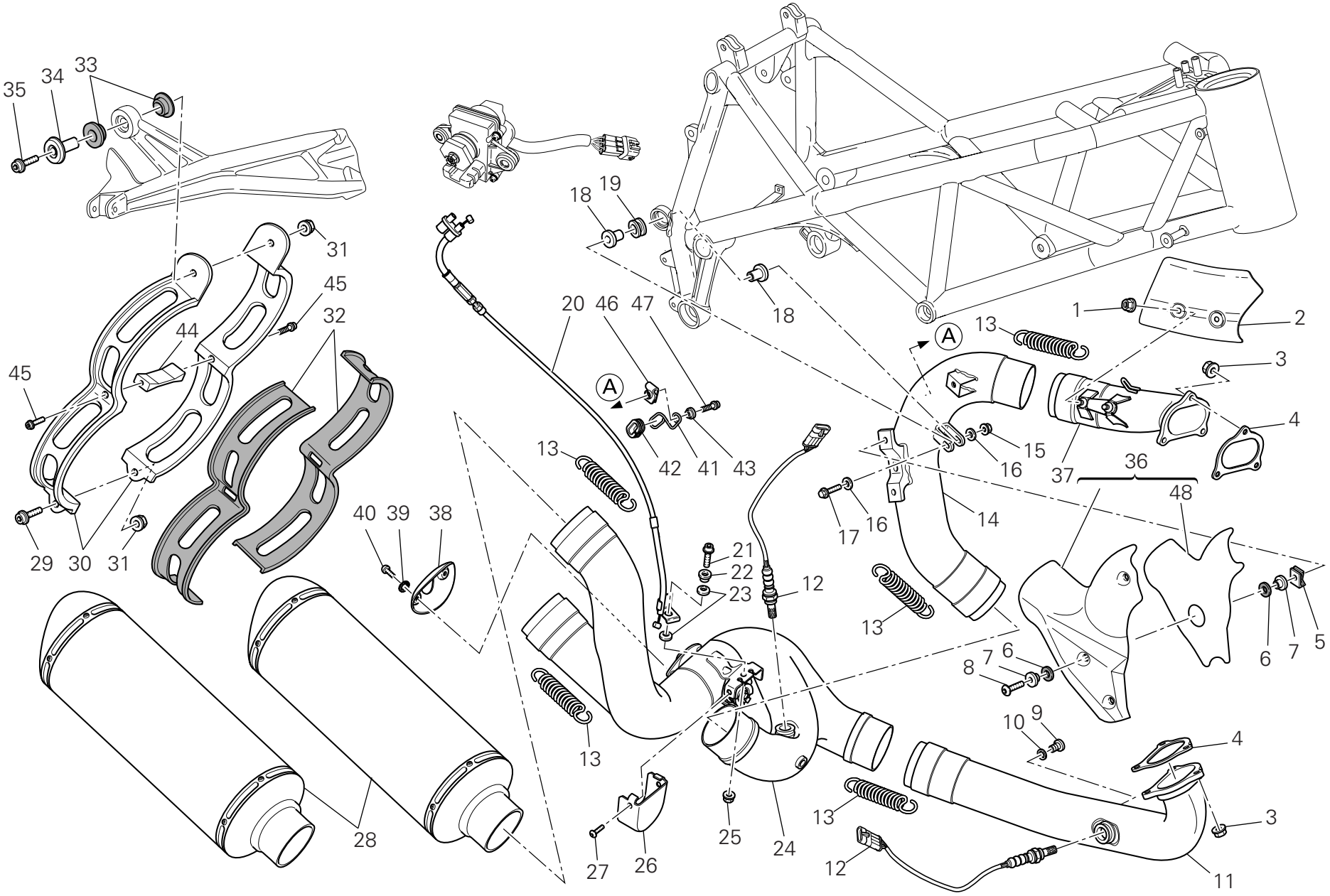

DRAWING 019 Exhaust system

| NOTES NO. | CODE NO. | DESCRIPTION | VALIDITY | Q.TY |
|---|---|---|---|---|
| 1 | 748.1.036.1A | Nut | | 2 |
| 2 | 460.1.286.1B | Heat guard | | 1 |
| 3 | 748.1.024.1A | Nut | | 6 |
| 4 | 790.1.015.1A | Exhaust gasket | | 2 |
| 5 | 850.4.055.1A | Quik fastening | | 3 |
| 6 | 852.1.072.1A | Washer | | 6 |
| 7 | 716.1.407.1A | Spacer | | 6 |
| 8 | 772.1.089.3B | Screw | | 3 |
| 9 | 780.1.007.1A | Cap | | 2 |
| 10 | 852.5.024.1A | Gasket th.1 | | 2 |
| 11 | 570.1.259.1A | Horizontal head exhaust pipe | | 1 |
| 12 | 552.1.111.1A | Lambda sensor | | 2 |
| 13 | 799.1.263.2A | Spring | | 5 |
| 14 | 571.1.260.2A | Vertical head exhaust pipe | | 1 |
| 15 | 749.4.031.1A | Nut | | 1 |
| 16 | 852.1.186.1A | Washer | | 2 |
| 17 | 772.5.038.1AB | Screw | | 1 |
| 18 | 716.1.414.1A | Spacer | | 2 |
| 19 | 764.1.064.1A | Vibration damper pad | | 1 |
| 20 | 732.2.027.1A | Cables unit | | 1 |
| 21 | 771.5.640.8B | Screw | | 1 |
| 22 | 716.1.144.1A | Spacer | | 1 |
| 23 | 799.4.009.1A | Spring washer | | 2 |
| 24 | 570.1.274.1B | Centre exhaust pipe | | 1 |
| 25 | 748.1.035.1B | Nut | | 1 |
| 26 | 460.1.293.1A | Protection | | 1 |
| 27 | 775.5.024.1A | Screw | | 2 |
| 28 | 573.1.116.1A | Silencer | | 2 |
| 29 | 771.5.725.8B | Screw | | 1 |
| 30 | 741.1.047.1A | Clamp | | 2 |
| 31 | 749.4.112.8B | Nut | | 2 |
| 32 | 788.1.083.1A | Clamp gasket | | 2 |
| 33 | 764.1.001.1A | Rubber pad | | 2 |
| 34 | 713.1.436.1A | Bush | | 1 |
| 35 | 773.5.506.8B | Screw | | 1 |
| 36 | 460.2.359.1A | Heat guard | | 1 |
| 37 | 160.1.367.4A | Exhaust manifold (vertical) | | 1 |
| 38 | 460.1.275.1A | Protection | | 1 |
| 39 | 462.4.046.1A | Spring washer | | 2 |
| 40 | 775.5.016.1A | Screw | | 2 |
| 41 | 881.1.058.1A | Cable guide | | 1 |
| 42 | 764.1.105.1A | Rubber pad | | 1 |
| 43 | 716.1.412.1A | Spacer | | 1 |
| 44 | 741.1.048.1A | Spacer | | 1 |
| 45 | 771.5.639.8B | Screw | | 2 |
| 46 | 850.4.038.1A | Quik fastening | | 1 |
| 47 | 771.5.663.8B | Screw | | 1 |
| 48 | 460.1.405.1A | Heat-reflecting protection | | 1 |



CATALOGUE No: 915.1.289.1B
ISSUED: 04 - 09

DRAWING 020 Headlight & instr. panel

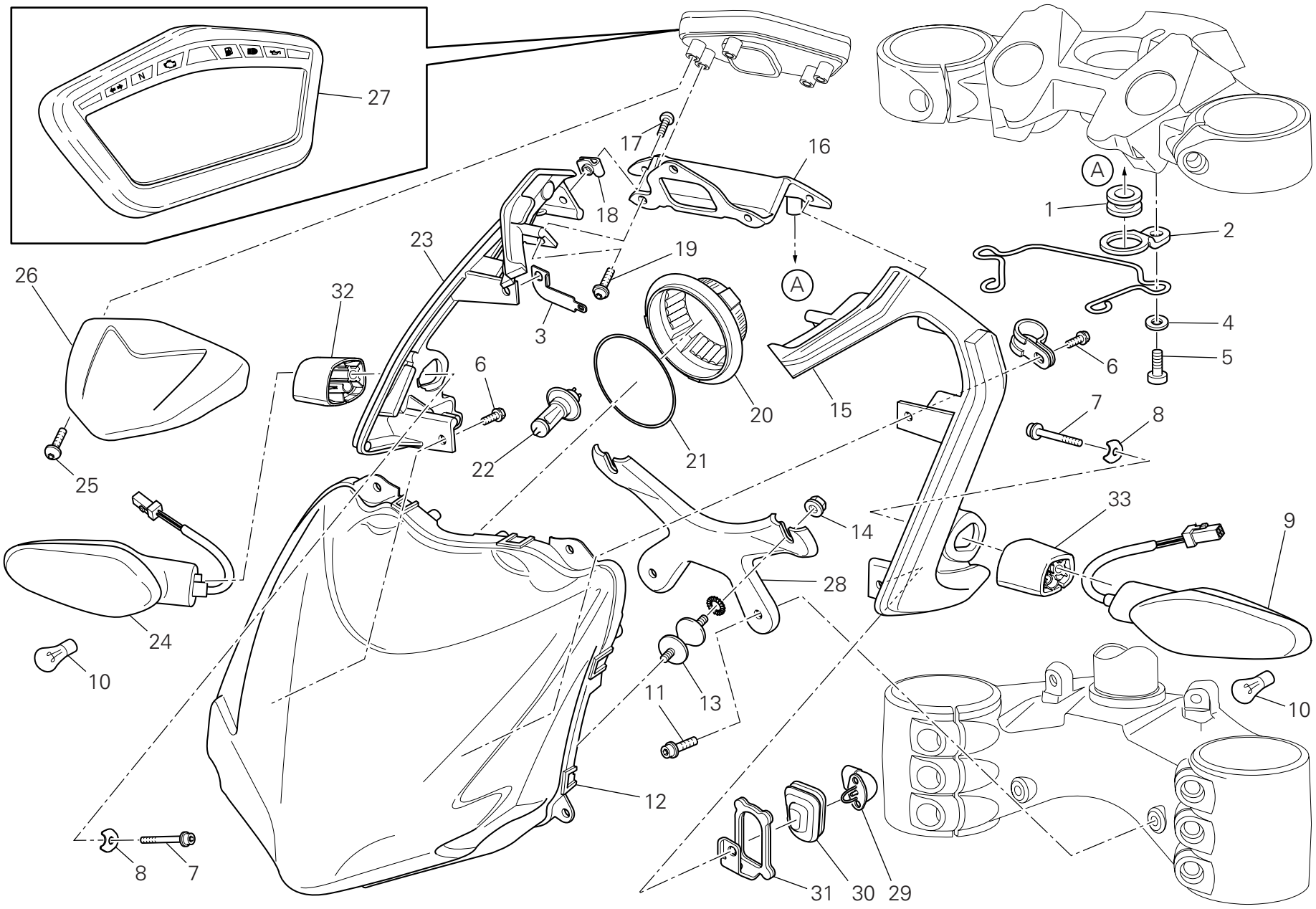

DRAWING 020 Headlight & instr. panel

| NOTES NO. | CODE NO. | DESCRIPTION | VALIDITY | Q.TY |
|---|---|---|---|---|
| 1 | 764.1.064.1A | Vibration damper pad | | 2 |
| 2 | 830.1.416.1A | Headlight holder (upper) | | 2 |
| 3 | 827.1.544.1A | Connector holder | | 1 |
| 4 | 852.1.176.1A | Washer | | 2 |
| 5 | 771.1.039.1A | Screw | | 2 |
| 6 | 772.1.061.1A | Screw | | 4 |
| 7 | 771.5.651.8B | Screw | | 2 |
| 8 | 827.1.493.1A | Plate | | 2 |
| 9 | 530.1.022.4A | Turn indicator (front) (L.H.) | | 1 |
| 10 | 390.4.021.1A | Bulb 12V-10W RY10W | | 2 |
| 11 | 771.5.663.8B | Screw | | 2 |
| 12 | 520.1.018.1A | Headlight (front) | | 1 |
| 13 | 700.1.048.1B | Vibration damper | | 2 |
| 14 | 750.5.001.1B | Nut | | 2 |
| 15 | 829.1.982.1A | Headlight holder (L.H.) | | 1 |
| 16 | 829.1.974.1A | Headlight holder (centre) | | 1 |
| 17 | 775.1.033.1A | Screw | | 2 |
| 18 | 850.4.047.1A | Quik fastening | | 2 |
| 19 | 774.4.004.1A | Screw | | 3 |
| 20 | 390.4.026.1A | Cap | | 1 |
| 21 | 390.4.027.1A | Gasket | | 1 |
| 22 | 390.4.024.1A | Bulb | | 1 |
| 23 | 829.1.983.1A | Headlight holder (R.H.) | | 1 |
| 24 | 530.1.023.4A | Turn indicator (front) (R.H.) | | 1 |
| 25 | 775.5.001.3C | Screw | | 2 |
| 26 | 247.1.335.1A | Instrument panel cover | | 1 |
| 27 | 406.1.072.4A | Complete instrument panel | | 1 |
| 28 | 830.1.411.1A | Headlight holder (bottom) | | 1 |
| 29 | 552.4.012.1A | Air temperature sensor | | 1 |
| 30 | 764.1.097.1A | Rubber pad | | 1 |
| 31 | 827.1.538.1A | Holder sensor | | 1 |
| 32 | 713.1.458.1A | Spacer (R.H.) | | 1 |
| 33 | 713.1.459.1A | Spacer (L.H.) | | 1 |



CATALOGUE No: 915.1.289.1B
ISSUED: 04 - 09

DRAWING 021 Handlebar and controls

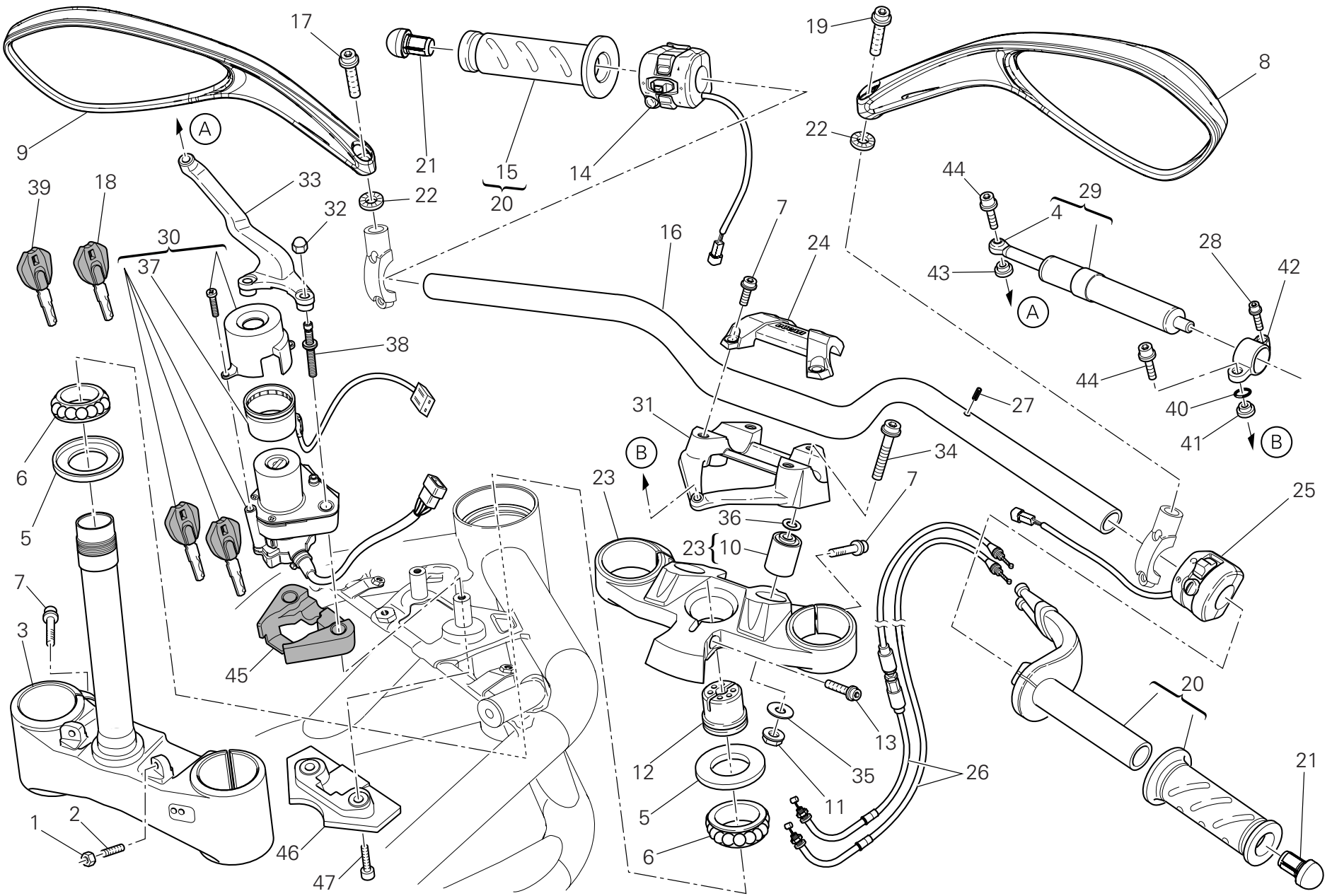

DRAWING 021 Handlebar and controls

| NOTES NO. | CODE NO. | DESCRIPTION | VALIDITY | Q.TY |
|---|---|---|---|---|
| 1 | 747.5.003.1A | Nut | | 2 |
| 2 | 779.1.298.1A | Special screw | | 2 |
| 3 | 342.2.056.1A | Steering head base with pin | | 1 |
| 4 | 848.2.002.1A | Joint | | 1 |
| 5 | 930.1.004.1A | Seal ring | | 2 |
| 6 | 702.4.004.1A | Bearing | | 2 |
| 7 | 771.5.725.8B | Screw | | 12 |
| 8 | 523.4.022.2A | Rear-view mirror (R.H.) | | 1 |
| 9 | 523.4.023.2A | Rear-view mirror (L.H.) | | 1 |
| 10 | 700.1.054.1A | Spacer | | 2 |
| 11 | 748.4.024.1AB | Nut | | 2 |
| 12 | 703.1.013.1A | Ring nut | | 1 |
| 13 | 771.5.727.8B | Screw | | 1 |
| 14 | 651.1.011.1C | Switch (L.H.) | | 1 |
| 15 | 361.1.002.1A | Grip | | 2 |
| 16 | 360.1.103.1A | Handlebar | | 1 |
| 17 | 771.1.374.1A | Screw | | 1 |
| 18 | 598.4.029.1A | Wrench without Transponder | | 1 |
| 19 | 771.1.373.1A | Screw (L.H.) | | 1 |
| 20 | 654.2.016.1A | Throttle control | | 1 |
| 21 | 872.1.058.1A | Cap | | 2 |
| 22 | 851.4.006.1A | Spring washer | | 2 |
| 23 | 341.2.071.1A | Steering head | | 1 |
| 24 | 360.1.102.1A | Single U-bolt (upper) | | 1 |
| 25 | 650.1.009.1D | Switch (R.H.) | | 1 |
| 26 | 656.2.092.1A | Cables unit | | 1 |
| 27 | 860.5.017.1A | Spring pin | | 1 |
| 28 | 771.1.039.1A | Screw | | 1 |
| 29 | 364.2.009.1A | Steering damper | | 1 |
| 30 | 652.4.014.1B | Switch | | 1 |
| 31 | 360.1.100.1A | Single U-bolt (bottom) | | 1 |
| 32 | 749.4.002.1A | Nut | | 2 |
| 33 | 830.1.527.1A | Holder | | 1 |
| 34 | 771.5.940.8B | Screw | | 2 |
| 35 | 852.1.049.1B | Washer | | 2 |
| 36 | 852.5.040.1A | Washer | | 2 |
| 37 | 518.4.005.1B | Antenna | | 1 |
| 38 | 779.1.591.1A | Special screw | | 2 |
| 39 | 598.4.028.1A | Wrench with Transponder | | 1 |
| 40 | 886.5.014.1A | O-ring | | 1 |
| 41 | 713.1.210.1A | Spacer | | 1 |
| 42 | 808.1.118.1A | Clamp | | 1 |
| 43 | 716.1.412.1A | Spacer | | 1 |
| 44 | 771.1.046.1A | Screw | | 2 |
| 45 | 866.1.116.1A | Pad | | 1 |
| 46 | 700.1.063.1A | Vibration damper | | 1 |
| 47 | 773.1.002.1A | Screw | | 2 |



CATALOGUE No: 915.1.289.1B
ISSUED: 04 - 09

DRAWING 021a Front forks

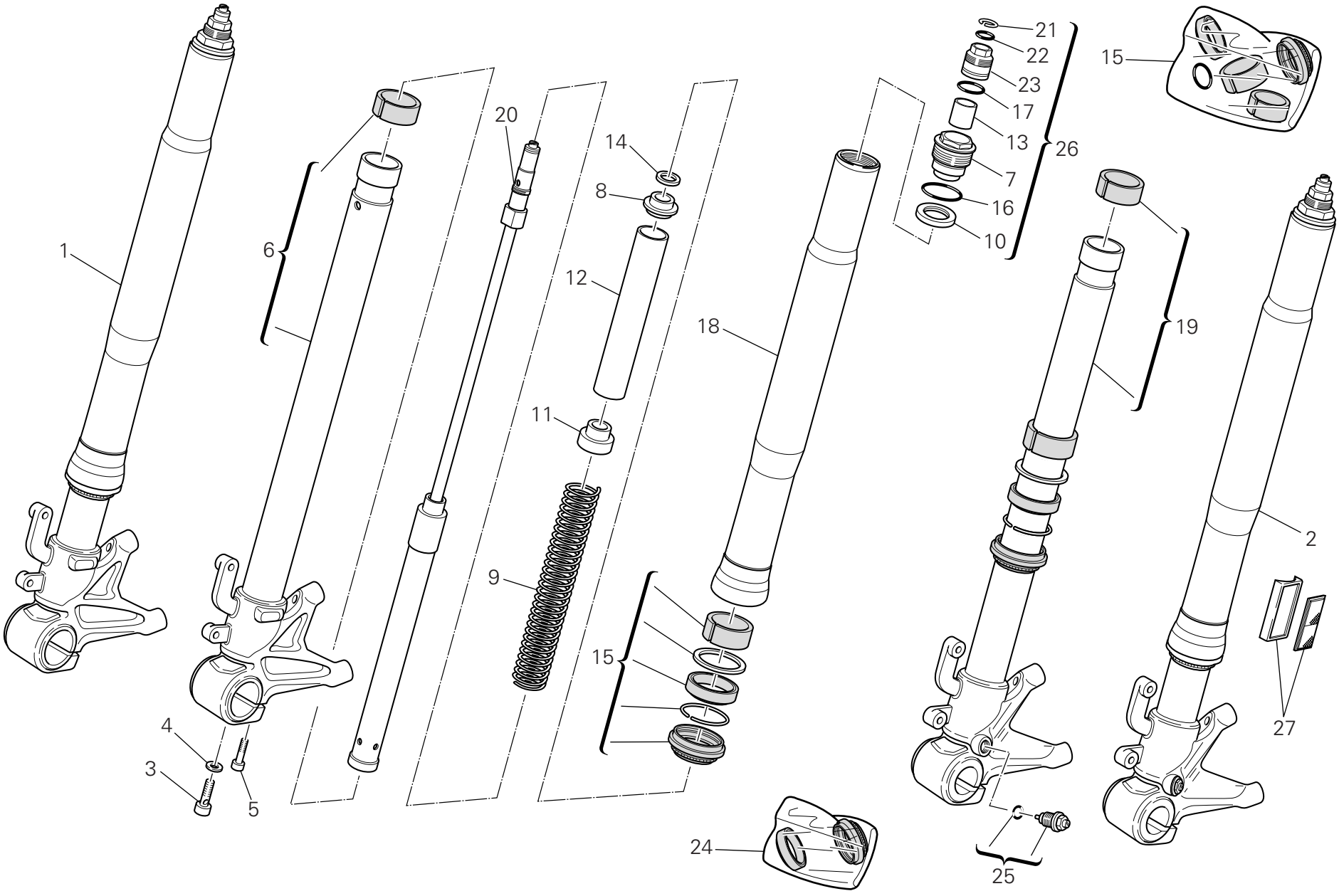

DRAWING 021a Front forks

| NOTES NO. | CODE NO. | DESCRIPTION | VALIDITY | Q.TY |
|---|---|---|---|---|
| 1 | 345.2.016.1B | R.H. fork leg assembly | | 1 |
| 2 | 344.2.016.1B | L.H. fork leg assembly | | 1 |
| 3 | 349.1.209.1A | Special screw | | 2 |
| 4 | 349.1.060.1B | Special washer | | 2 |
| 5 | 771.5.727.8B | Screw | | 4 |
| 6 | 349.1.283.1A | Slider (R.H.) | | 1 |
| 7 | 349.1.228.1A | Cap | | 2 |
| 8 | 349.1.064.1A | Coupling | | 2 |
| 9 | 349.1.225.1A | Spring | | 2 |
| 10 | 349.1.170.1A | Dust seal | | 2 |
| 11 | 349.1.226.1A | Coupling | | 2 |
| 12 | 349.1.227.1A | Spring coupling | | 2 |
| 13 | 349.1.185.1A | Coupling | | 2 |
| 14 | 349.1.065.1A | Rubber cush drive hub | | 2 |
| 15 | 349.1.229.1A | Overhaul kit | | 2 |
| 16 | 349.1.186.1A | O-Ring | | 2 |
| 17 | 349.1.288.1A | O-Ring | | 2 |
| 18 | 349.1.223.1A | Stanchion tube | | 2 |
| 19 | 349.1.284.1A | Slider (L.H.) | | 1 |
| 20 | 349.1.224.1A | Damper tube | | 2 |
| 21 | 349.1.098.1A | Snap ring | | 2 |
| 22 | 349.1.189.1A | O-Ring | | 2 |
| 23 | 349.1.188.1A | Preload adjuster | | 2 |
| 24 | 349.1.263.1A | Seat kit | | 2 |
| 25 | 349.2.065.1A | Adjusting screw | | 2 |
| 26 | 349.2.056.1A | Complete cap | | 2 |
| 27 | 529.1.001.2A | Cat's eye (AMBER) | | 2 |



CATALOGUE No: 915.1.289.1B
ISSUED: 04 - 09

DRAWING 022 Frame

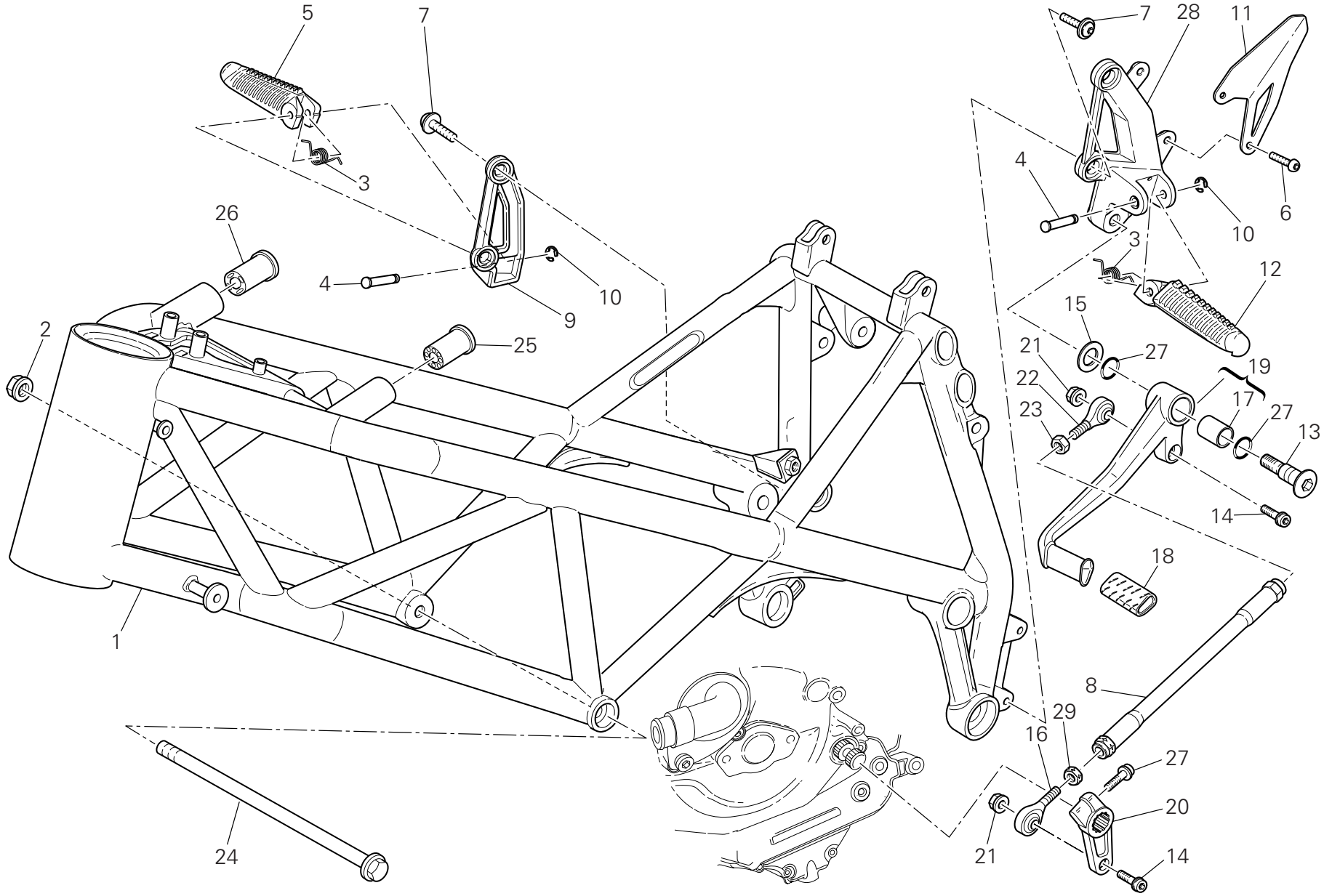

DRAWING 022 Frame

| NOTES NO. | CODE NO. | DESCRIPTION | VALIDITY | Q.TY |
|---|---|---|---|---|
| 1 | 470.1.199.1AK | Frame (RACINGBLACK) | | 1 |
| 2 | 748.4.002.1A | Nut | | 2 |
| 3 | 799.1.166.1A | Spring | | 2 |
| 4 | 821.1.051.1AB | Pin | | 2 |
| 5 | 464.1.056.1A | Foot peg (front) (R.H.) | | 1 |
| 6 | 775.1.051.1B | Screw | | 2 |
| 7 | 772.1.077.2AB | Screw | | 4 |
| 8 | 117.1.088.2A | Gearbox transmission rod | | 1 |
| 9 | 824.1.155.1A | Foot peg holder plate (front) (R.H.) | | 1 |
| 10 | 884.5.003.1A | Ring | | 2 |
| 11 | 460.1.331.1A | Heel guard (front) (L.H.) | | 1 |
| 12 | 464.1.055.1A | Foot peg (front) (L.H.) | | 1 |
| 13 | 821.1.170.1A | Pin | | 1 |
| 14 | 771.5.667.8B | Screw | | 3 |
| 15 | 852.1.151.1A | Washer | | 1 |
| 16 | 848.5.001.1A | Ball joint | | 1 |
| 17 | 712.1.034.1A | Bush | | 1 |
| 18 | 764.1.011.2A | Rubber pad | | 1 |
| 19 | 456.1.203.1A | Gearchange lever | | 1 |
| 20 | 456.1.046.1B | Gearchange control lever | | 1 |
| 21 | 749.4.004.1A | Nut | | 2 |
| 22 | 848.5.002.1A | Ball joint | | 1 |
| 23 | 747.5.010.1A | Nut | | 1 |
| 24 | 779.1.484.2B | Special screw | | 2 |
| 25 | 764.1.051.1A | Rubber pad | | 1 |
| 26 | 764.1.050.1A | Rubber pad | | 1 |
| 27 | 886.4.116.1A | O-ring | | 2 |
| 28 | 824.1.154.1A | Foot peg holder plate (front) (L.H.) | | 1 |
| 29 | 747.5.001.1AB | Nut (L.H.) | | 1 |



CATALOGUE No: 915.1.289.1B
ISSUED: 04 - 09

DRAWING 022a Stand

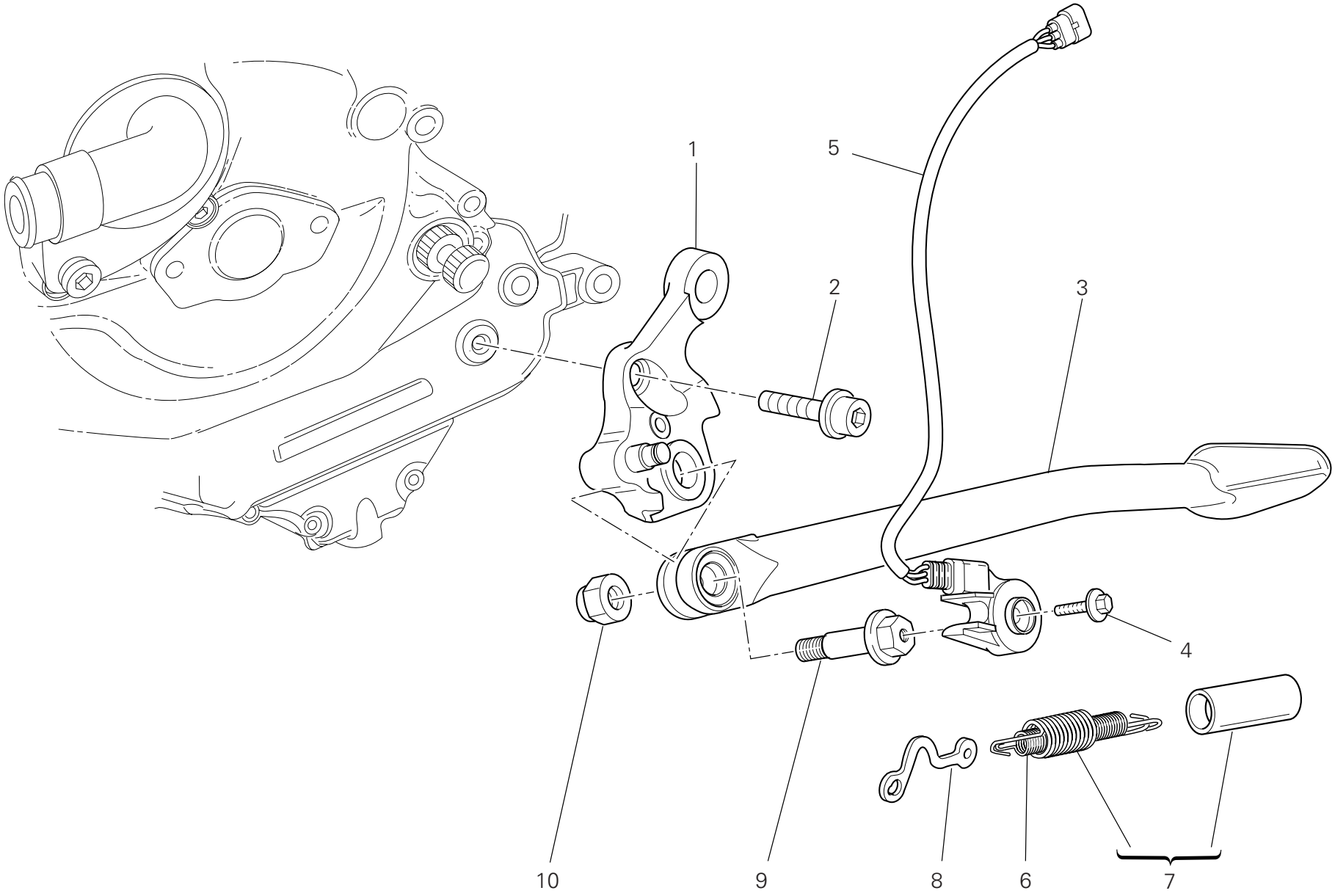

DRAWING 022a Stand

| NOTES NO. | CODE NO. | DESCRIPTION | VALIDITY | Q.TY |
|---|---|---|---|---|
| 1 | 556.2.045.1A | Plate | | 1 |
| 2 | 771.1.043.1A | Screw | | 2 |
| 3 | 556.1.046.2AB | Side stand (BLACK) | | 1 |
| 4 | 779.4.005.2A | Screw | | 1 |
| 5 | 539.1.023.3A | Switch | | 1 |
| 6 | 799.1.158.1A | Inner spring | | 1 |
| 7 | 799.2.159.1A | Complete spring | | 1 |
| 8 | 829.1.260.2A | Plate | | 1 |
| 9 | 821.1.103.2A | Pivot | | 1 |
| 10 | 750.1.048.1A | Nut | | 1 |

| NOTES NO. | CODE NO. | DESCRIPTION | VALIDITY | Q.TY |
|---|---|---|---|---|



CATALOGUE No: 915.1.289.1B
ISSUED: 04 - 09

DRAWING 023 Clutch control

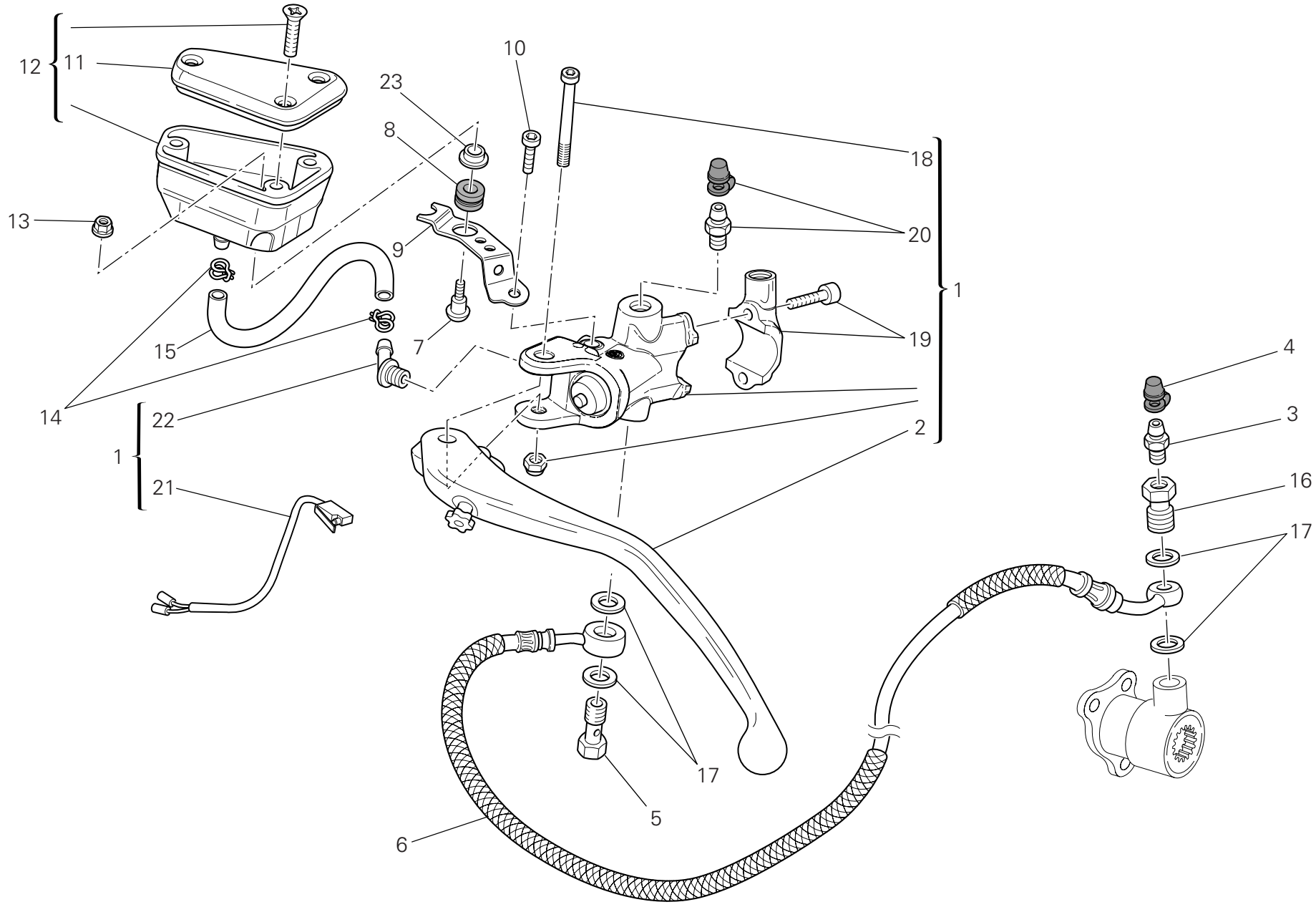

DRAWING 023 Clutch control

| NOTES NO. | CODE NO. | DESCRIPTION | VALIDITY | Q.TY |
|---|---|---|---|---|
| 1 | 630.4.048.1A | Clutch drive pump | | 1 |
| 2 | 631.4.034.1A | Clutch control lever | | 1 |
| 3 | 187.1.002.1A | Bleed | | 1 |
| 4 | 612.4.005.1A | Dust seal | | 1 |
| 5 | 779.1.082.1AB | Special screw | | 1 |
| 6 | 632.1.049.1B | Clutch control pipe (METAL PLAITED) | | 1 |
| 7 | 779.1.092.1A | Screw | | 1 |
| 8 | 0370.72.020 | Vibration damper pad | | 1 |
| 9 | 829.1.978.1A | Bracket | | 1 |
| 10 | 773.5.062.3B | Screw | | 1 |
| 11 | 893.4.008.1A | Cap | | 1 |
| 12 | 585.4.010.1A | Complete oil tank | | 1 |
| 13 | 8000.56443 | Nut | | 1 |
| 14 | 741.4.043.1A | Hose guide | | 2 |
| 15 | 877.1.138.1A | Tube | | 1 |
| 16 | 779.1.366.1AB | Special screw | | 1 |
| 17 | 852.5.024.1A | Gasket th.1 | | 4 |
| 18 | 626.4.056.1A | Pin | | 1 |
| 19 | 626.4.066.1A | Spare bracket | | 1 |
| 20 | 631.4.028.1A | Spare bleed union | | 1 |
| 21 | 539.4.036.1A | Microswitch | | 1 |
| 22 | 631.4.008.1A | Spare union | | 1 |
| 23 | 852.1.250.1A | Spacer | | 1 |

| NOTES NO. | CODE NO. | DESCRIPTION | VALIDITY | Q.TY |
|---|---|---|---|---|



CATALOGUE No: 915.1.289.1B
ISSUED: 04 - 09

DRAWING 024 Front brake

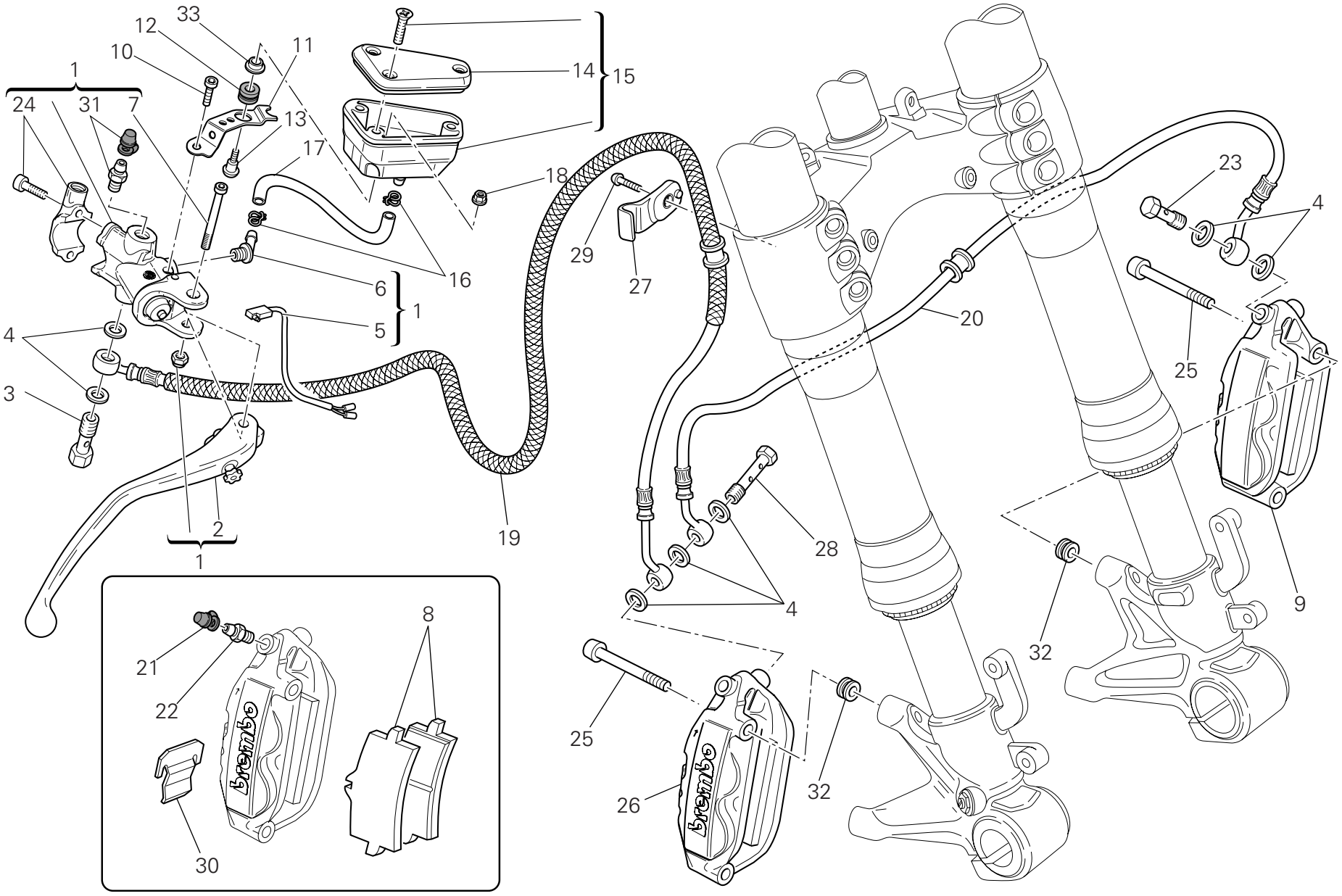

DRAWING 024 Front brake

| NOTES NO. | CODE NO. | DESCRIPTION | VALIDITY | Q.TY |
|---|---|---|---|---|
| 1 | 624.4.057.1A | Front brake pump | | 1 |
| 2 | 631.4.033.1A | Brake control lever | | 1 |
| 3 | 779.1.415.1A | Special screw | | 1 |
| 4 | 852.5.024.1A | Gasket th.1 | | 7 |
| 5 | 539.4.035.1A | Microswitch | | 1 |
| 6 | 631.4.008.1A | Spare union | | 1 |
| 7 | 626.4.056.1A | Pin | | 1 |
| 8 | 613.4.090.1A | Pads pair | | 2 |
| 9 | 610.4.090.1C | Brake caliper (L.H.) | | 1 |
| 10 | 773.5.062.3B | Screw | | 1 |
| 11 | 829.1.979.1A | Bracket | | 1 |
| 12 | 0370.72.020 | Vibration damper pad | | 1 |
| 13 | 779.1.092.1A | Screw | | 1 |
| 14 | 893.4.007.1A | Tank cap | | 1 |
| 15 | 585.4.011.1A | Complete oil tank | | 1 |
| 16 | 741.4.043.1A | Hose guide | | 2 |
| 17 | 877.1.138.1A | Tube | | 1 |
| 18 | 8000.56443 | Nut | | 1 |
| 19 | 618.4.095.1B | Caliper pump pipe | | 1 |
| 20 | 618.4.075.1B | Front brake line | | 1 |
| 21 | 612.4.005.1A | Dust seal | | 2 |
| 22 | 187.1.002.1A | Bleed | | 2 |
| 23 | 779.1.366.1AB | Special screw | | 1 |
| 24 | 626.4.067.1A | Spare bracket | | 1 |
| 25 | 779.1.331.1D | Screw | | 4 |
| 26 | 610.4.091.1C | Brake caliper (R.H.) | | 1 |
| 27 | 830.1.479.1A | Bracket | | 1 |

| NOTES NO. | CODE NO. | DESCRIPTION | VALIDITY | Q.TY |
|---|---|---|---|---|
| 28 | 779.1.309.1AB | Special screw | | 1 |
| 29 | 775.1.054.1A | Screw | | 1 |
| 30 | 612.4.037.1A | Spring | | 2 |
| 31 | 631.4.028.1A | Spare bleed union | | 2 |
| 32 | 713.1.364.1A | Spacer | | 4 |
| 33 | 852.1.250.1A | Spacer | | 1 |



CATALOGUE No: 915.1.289.1B
ISSUED: 04 - 09

DRAWING 025 Rear brake

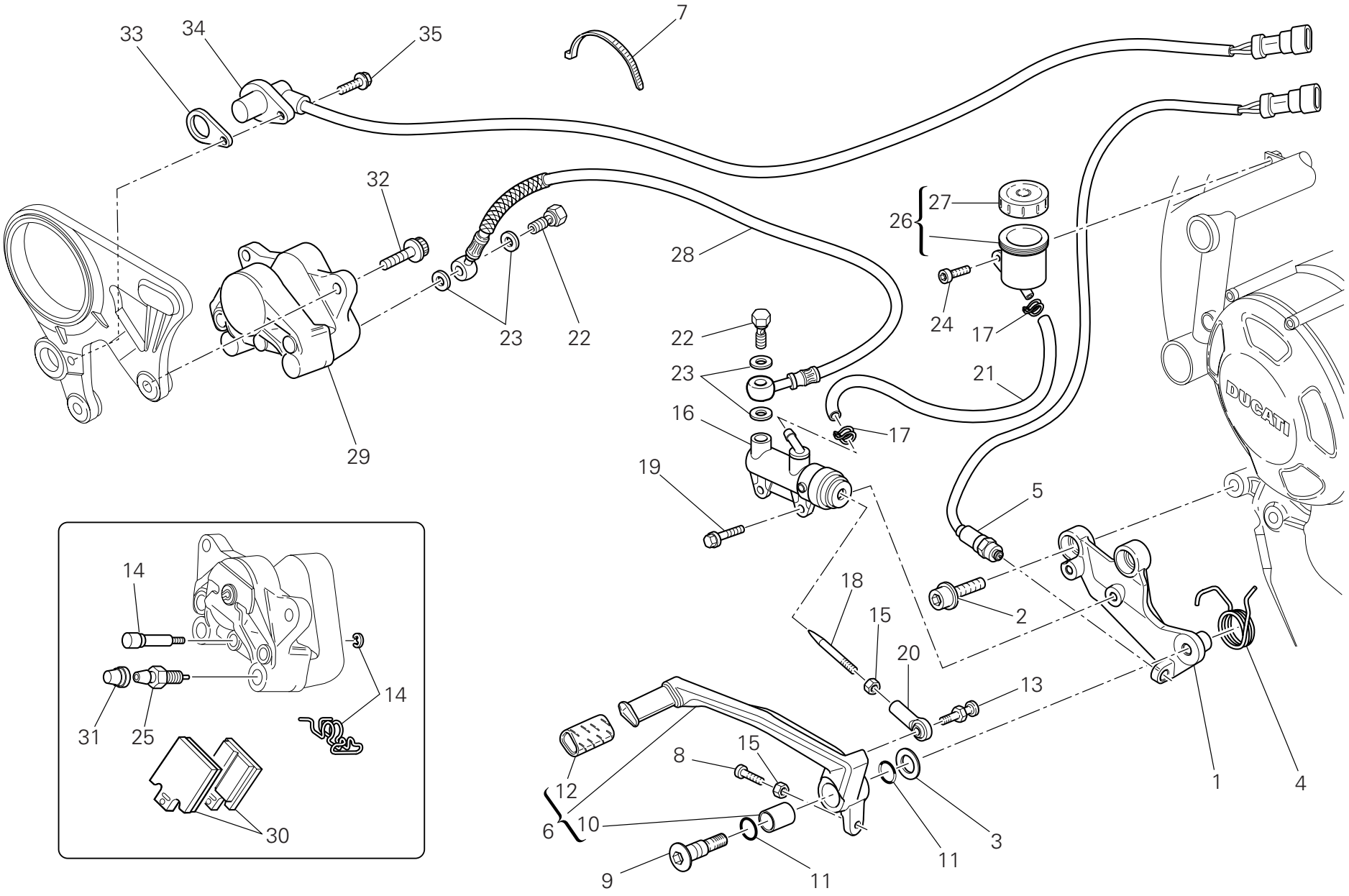

DRAWING 025 Rear brake

| NOTES NO. | CODE NO. | DESCRIPTION | VALIDITY | Q.TY |
|---|---|---|---|---|
| 1 | 829.1.984.1A | Plate | | 1 |
| 2 | 771.1.043.1A | Screw | | 2 |
| 3 | 852.1.151.1A | Washer | | 1 |
| 4 | 799.1.256.1A | Spring | | 1 |
| 5 | 539.4.003.1B | Switch | | 1 |
| 6 | 457.1.047.1A | Brake control lever (rear) | | 1 |
| 7 | 741.4.038.1A | Hose guide | | 3 |
| 8 | 779.1.237.1B | Adjusting screw | | 1 |
| 9 | 821.1.170.1A | Pin | | 1 |
| 10 | 712.1.034.1A | Bush | | 1 |
| 11 | 886.4.116.1A | O-ring | | 2 |
| 12 | 764.1.011.2A | Rubber pad | | 1 |
| 13 | 821.1.273.1A | Pin | | 1 |
| 14 | 612.4.016.1A | Spare pins and spring | | 1 |
| 15 | 747.5.003.1A | Nut | | 2 |
| 16 | 625.4.018.1B | Rear brake pump | | 1 |
| 17 | 741.4.043.1A | Hose guide | | 2 |
| 18 | 117.1.044.1A | Adjuster rod | | 1 |
| 19 | 772.1.063.1A | Screw | | 1 |
| 20 | 184.1.010.2A | Ball joint | | 1 |
| 21 | 877.1.139.1A | Tube | | 1 |
| 22 | 779.1.366.1AB | Special screw | | 2 |
| 23 | 852.5.024.1A | Gasket th.1 | | 4 |
| 24 | 773.5.062.8B | Screw | | 1 |
| 25 | 631.4.016.1A | Bleed | | 1 |
| 26 | 585.4.001.1A | Complete oil tank | | 1 |
| 27 | 893.4.005.1A | Cap | | 1 |
| 28 | 619.4.042.1B | Rear brake line (METAL PLAITED) | | 1 |
| 29 | 611.4.029.1A | Rear brake caliper | | 1 |
| 30 | 613.4.038.1A | Pads pair | | 1 |
| 31 | 612.4.008.1A | Dust seal | | 1 |
| 32 | 771.5.723.8B | Screw | | 2 |
| 33 | 713.1.192.1A | Spacer | | 1 |
| 34 | 552.4.037.3E | Speed sensor | | 1 |
| 35 | 771.5.665.8B | Screw | | 1 |



CATALOGUE No: 915.1.289.1B
ISSUED: 04 - 09

DRAWING 026 Front and rear wheels

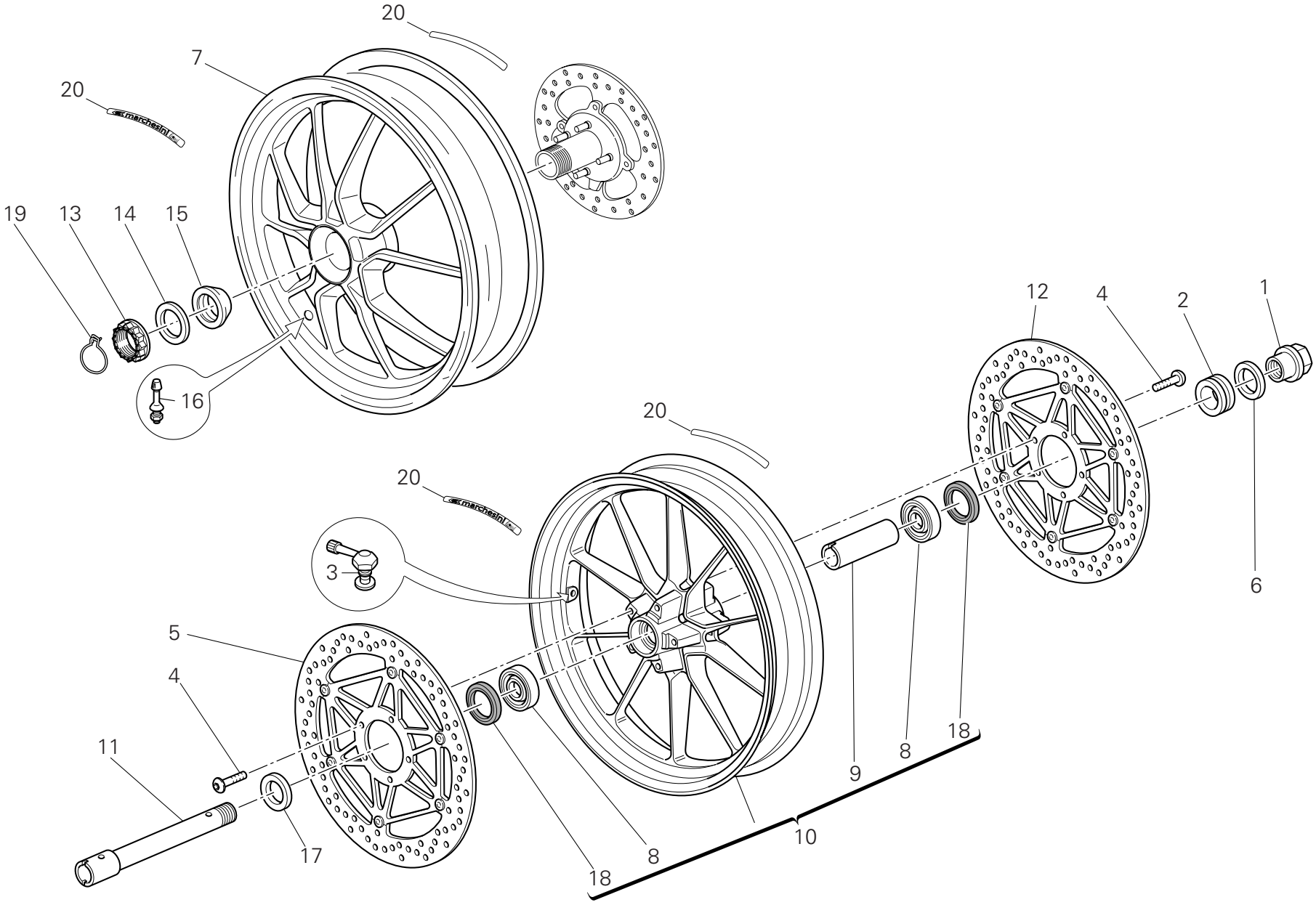

DRAWING 026 Front and rear wheels

| NOTES NO. | CODE NO. | DESCRIPTION | VALIDITY | Q.TY |
|---|---|---|---|---|
| 1 | 748.1.065.1A | Nut | | 1 |
| 2 | 713.1.197.3A | Spacer (L.H.) | | 1 |
| 3 | 497.2.001.2A | Valve | | 1 |
| 4 | 779.1.399.1A | Screw | | 10 |
| 5 | 492.4.090.1A | Brake disc (R.H.) | | 1 |
| 6 | 852.1.222.1A | Washer | | 1 |
| 7 | 502.2.127.2AC | Wheel rim (rear) | | 1 |
| 8 | 702.5.045.1A | Bearing | | 2 |
| 9 | 714.1.094.1A | Spacer (internal) | | 1 |
| 10 | 501.2.127.1AC | Wheel rim (front) | | 1 |
| 11 | 819.1.060.1A | Wheel spindle (front) | | 1 |
| 12 | 492.4.089.1A | Brake disc (L.H.) | | 1 |
| 13 | 750.1.140.1A | Nut | | 1 |
| 14 | 852.1.221.1A | Washer | | 1 |
| 15 | 714.1.074.1A | Spacer | | 1 |
| 16 | 497.2.003.1A | Valve | | 1 |
| 17 | 713.1.196.1A | Spacer (R.H.) | | 1 |
| 18 | 930.4.052.1A | Seal ring | | 2 |
| 19 | 759.1.022.2A | Clip | | 1 |
| 20 | 438.1.454.1A | Sticker "MARCHESINI" (WHITE) | | 4 |
| 20 | 438.1.455.1A | Sticker "MARCHESINI" (YELLOW) | | 4 |

| NOTES NO. | CODE NO. | DESCRIPTION | VALIDITY | Q.TY |
|---|---|---|---|---|



CATALOGUE No: 915.1.289.1B
ISSUED: 04 - 09

DRAWING 026a Rear wheel axle

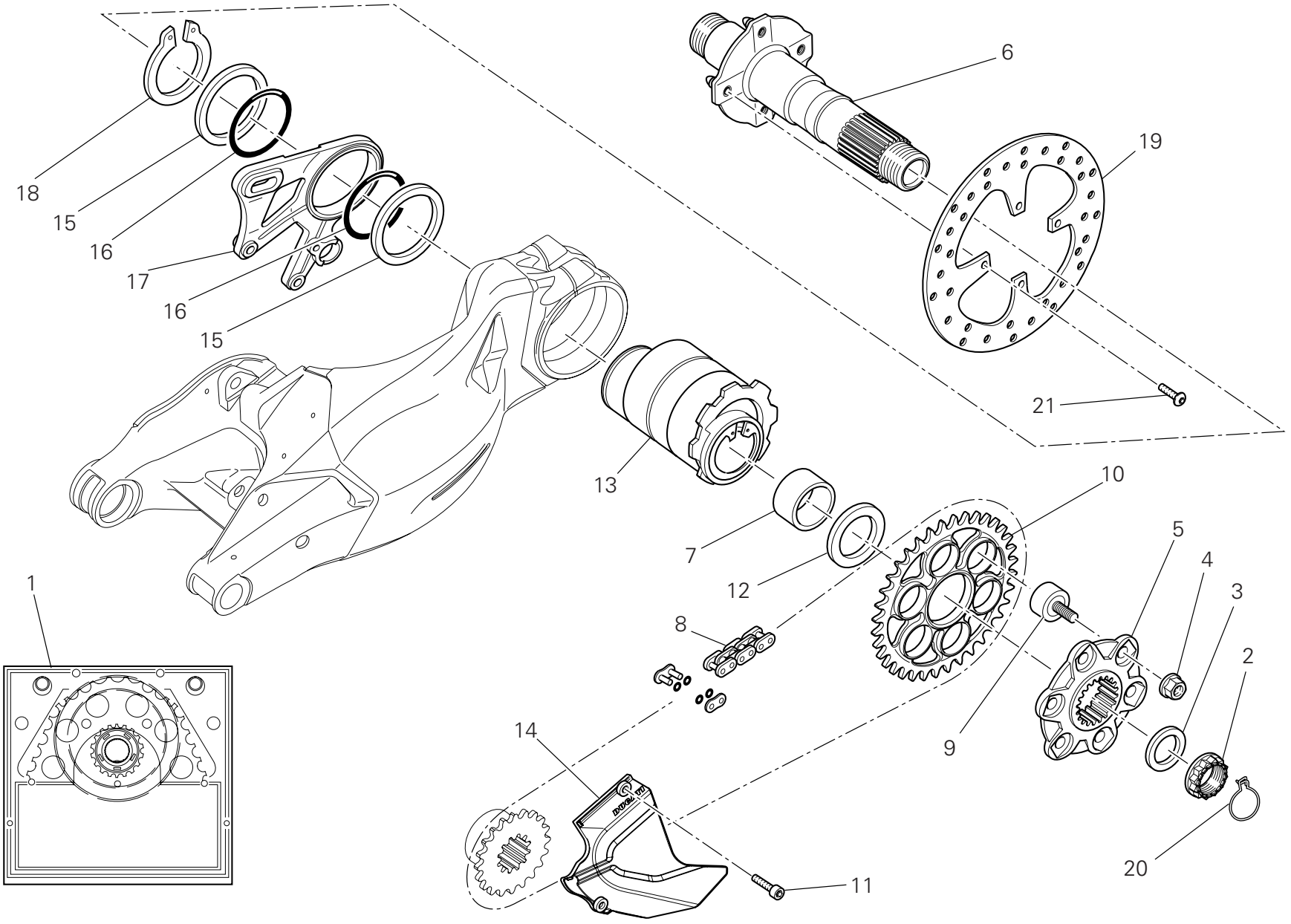

DRAWING 026a Rear wheel axle

| NOTES NO. | CODE NO. | DESCRIPTION | VALIDITY | Q.TY |
|---|---|---|---|---|
| 1 | 676.2.074.1A | Final drive kit | | 1 |
| 2 | 750.1.140.1A | Nut | | 1 |
| 3 | 852.1.221.1A | Washer | | 1 |
| 4 | 748.1.046.1A | Nut | | 6 |
| 5 | 160.1.369.2B | Rear sprocket flange | | 1 |
| 6 | 819.2.063.2A | Wheel spindle (rear) | | 1 |
| 7 | 881.1.054.1A | Inner ring | | 1 |
| 8 | 676.4.074.1A | Chain 101+1 | | 1 |
| 9 | 700.9.056.2A | Rubber cush drive hub | | 6 |
| 10 | 494.1.132.1A | Ring gear Z=38 | | 1 |
| 11 | 771.1.039.1A | Screw | | 2 |
| 12 | 714.1.075.1A | Spacer | | 1 |
| 13 | 756.2.007.1A | Hub | | 1 |
| 14 | 460.1.255.1A | Chain cover | | 1 |
| 15 | 852.1.217.1A | Washer | | 2 |
| 16 | 886.4.124.1A | O-ring | | 2 |
| 17 | 825.1.036.2A | Caliper holder plate | | 1 |
| 18 | 884.4.051.1A | Circlip | | 1 |
| 19 | 492.1.004.1A | Rear brake disc | | 1 |
| 20 | 759.1.022.2A | Clip | | 1 |
| 21 | 779.1.488.1A | Screw | | 4 |

| NOTES NO. | CODE NO. | DESCRIPTION | VALIDITY | Q.TY |
|---|---|---|---|---|



CATALOGUE No: 915.1.289.1B
ISSUED: 04 - 09

DRAWING 027 Rear subframe

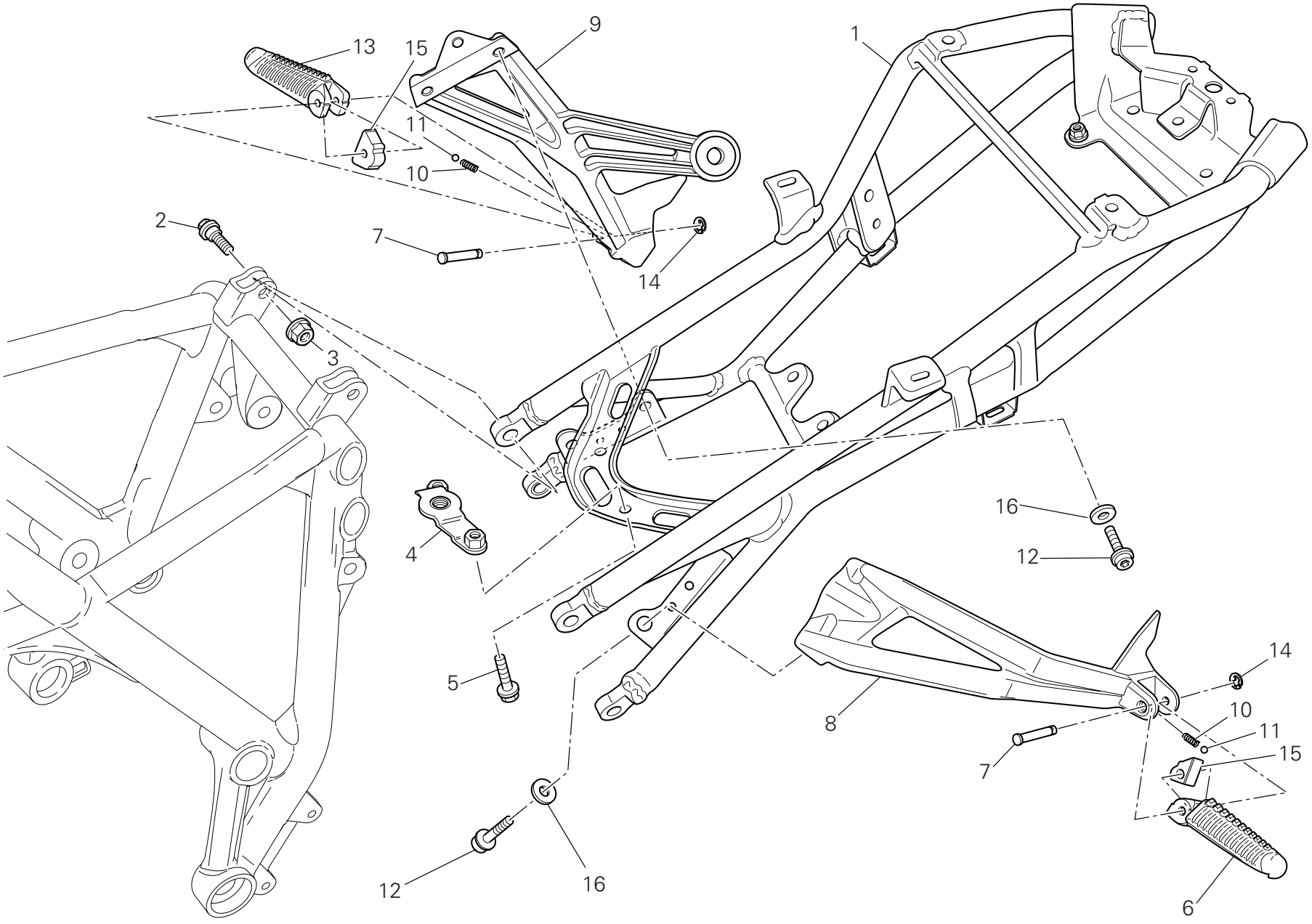

DRAWING 027 Rear subframe

| NOTES NO. | CODE NO. | DESCRIPTION | VALIDITY | Q.TY |
|---|---|---|---|---|
| 1 | 470.1.198.1AA | Rear frame | | 1 |
| 2 | 772.1.087.3AB | Screw | | 4 |
| 3 | 749.4.112.8B | Nut | | 4 |
| 4 | 830.1.543.1A | Bracket | | 1 |
| 5 | 771.1.369.1A | Screw | | 2 |
| 6 | 464.1.055.1A | Foot peg (rear) (L.H.) | | 1 |
| 7 | 821.1.051.1AB | Pin | | 2 |
| 8 | 824.1.156.1A | Foot peg holder plate (rear) (L.H.) | | 1 |
| 9 | 824.1.157.1A | Foot peg holder plate (rear) (R.H.) | | 1 |
| 10 | 799.1.024.1A | Spring | | 2 |
| 11 | 847.4.002.1A | Ball | | 2 |
| 12 | 771.5.721.3B | Screw | | 6 |
| 13 | 464.1.056.1A | Foot peg (rear) (R.H.) | | 1 |
| 14 | 884.5.003.1A | Ring | | 2 |
| 15 | 696.1.012.1A | Block | | 2 |
| 16 | 852.1.232.1A | Washer | | 6 |

| NOTES NO. | CODE NO. | DESCRIPTION | VALIDITY | Q.TY |
|---|---|---|---|---|



CATALOGUE No: 915.1.289.1B
ISSUED: 04 - 09

DRAWING 027a Number plate holder

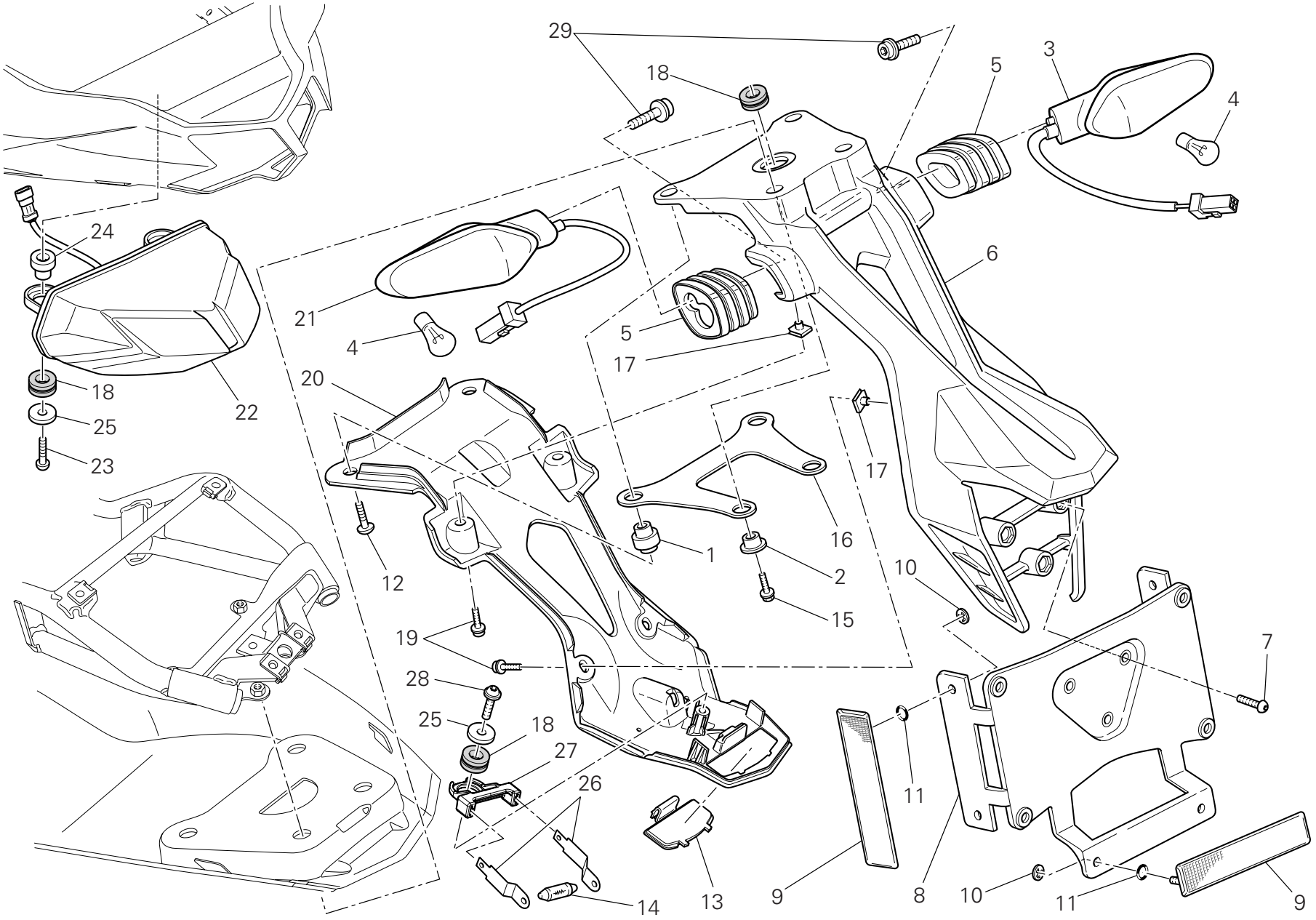

DRAWING 027a Number plate holder

| NOTES NO. | CODE NO. | DESCRIPTION | VALIDITY | Q.TY |
|---|---|---|---|---|
| 1 | 716.1.154.1A | Spacer (front) | | 2 |
| 2 | 716.1.155.1A | Spacer (rear) | | 2 |
| 3 | 530.1.022.4A | Turn indicator (rear) (R.H.) | | 1 |
| 4 | 390.4.021.1A | Bulb 12V-10W RY10W | | 2 |
| 5 | 713.1.470.1A | Spacer | | 2 |
| 6 | 829.1.981.1A | Number plate holder | | 1 |
| 7 | 775.5.013.1A | Screw | | 3 |
| 8 | 561.1.027.1A | Plate | | 1 |
| 9 | 529.1.010.1A | Reflector | | 3 |
| 10 | 850.4.052.1A | Quik fastening | | 6 |
| 11 | 886.4.064.1A | O-ring | | 6 |
| 12 | 772.1.101.1B | Screw | | 2 |
| 13 | 247.1.333.1A | Cover | | 1 |
| 14 | 390.4.016.1A | Bulb 12V-5W C5W | | 1 |
| 15 | 772.5.101.8B | Screw | | 2 |
| 16 | 829.1.980.1A | Holder | | 1 |
| 17 | 850.4.047.1A | Quik fastening | | 5 |
| 18 | 764.1.090.1A | Rubber pad | | 4 |
| 19 | 773.5.039.3B | Screw | | 5 |
| 20 | 247.1.345.1A | Mudflap | | 1 |
| 21 | 530.1.023.4A | Turn indicator (rear) (L.H.) | | 1 |
| 22 | 525.1.037.1A | Tail light | | 1 |
| 23 | 775.1.045.1A | Screw | | 2 |
| 24 | 716.1.418.1A | Spacer | | 2 |
| 25 | 852.4.173.1A | Washer | | 2 |
| 26 | 391.1.003.3A | Blade | | 2 |
| 27 | 830.1.548.1A | Bracket | | 1 |
| 28 | 774.4.006.1A | Screw | | 1 |
| 29 | 771.5.639.8B | Screw | | 2 |



CATALOGUE No: 915.1.289.1B
ISSUED: 04 - 09

DRAWING 028 Rear suspension

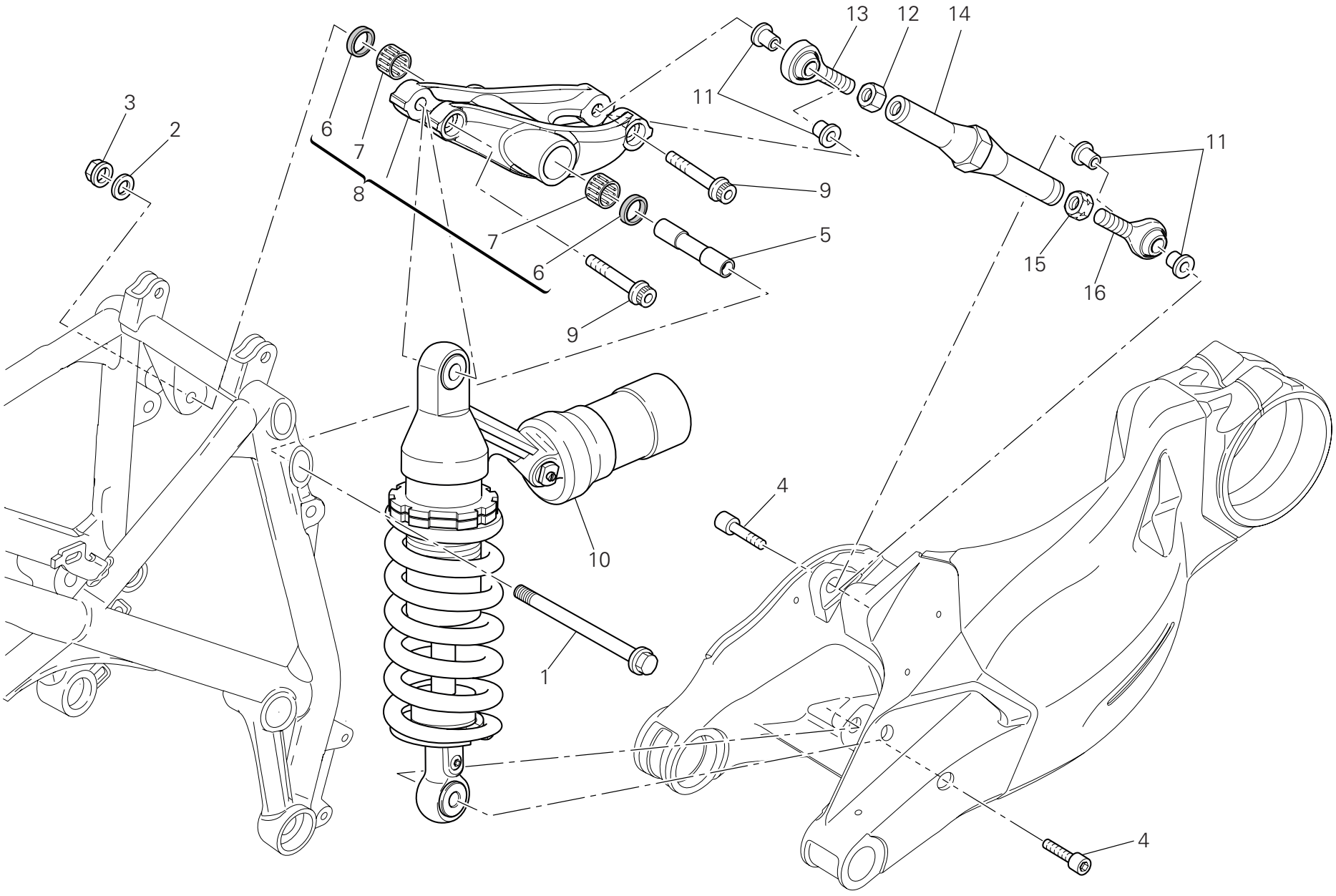

DRAWING 028 Rear suspension

| NOTES NO. | CODE NO. | DESCRIPTION | VALIDITY | Q.TY |
|---|---|---|---|---|
| 1 | 771.1.031.1A | Screw | | 1 |
| 2 | 713.1.239.1A | Washer | | 1 |
| 3 | 748.4.037.1AB | Nut | | 1 |
| 4 | 779.1.504.1A | Screw | | 2 |
| 5 | 715.1.003.1A | Spacer | | 1 |
| 6 | 930.4.011.1A | Seal ring | | 2 |
| 7 | 701.4.004.1A | Needle bearing | | 2 |
| 8 | 372.2.062.2A | Rocker assembly | | 1 |
| 9 | 771.5.938.8B | Screw | | 2 |
| 10 | 365.2.074.1A | Shock absorber | | 1 |
| 11 | 710.1.132.1A | Bush | | 4 |
| 12 | 750.1.021.1A | Nut | | 1 |
| 13 | 848.4.026.1A | Ball joint | | 1 |
| 14 | 875.1.128.1A | Tie rod | | 1 |
| 15 | 750.1.022.1A | Nut | | 1 |
| 16 | 848.4.027.1A | Ball joint | | 1 |

| NOTES NO. | CODE NO. | DESCRIPTION | VALIDITY | Q.TY |
|---|---|---|---|---|



CATALOGUE No: 915.1.289.1B
ISSUED: 04 - 09

DRAWING 028a Swingarm

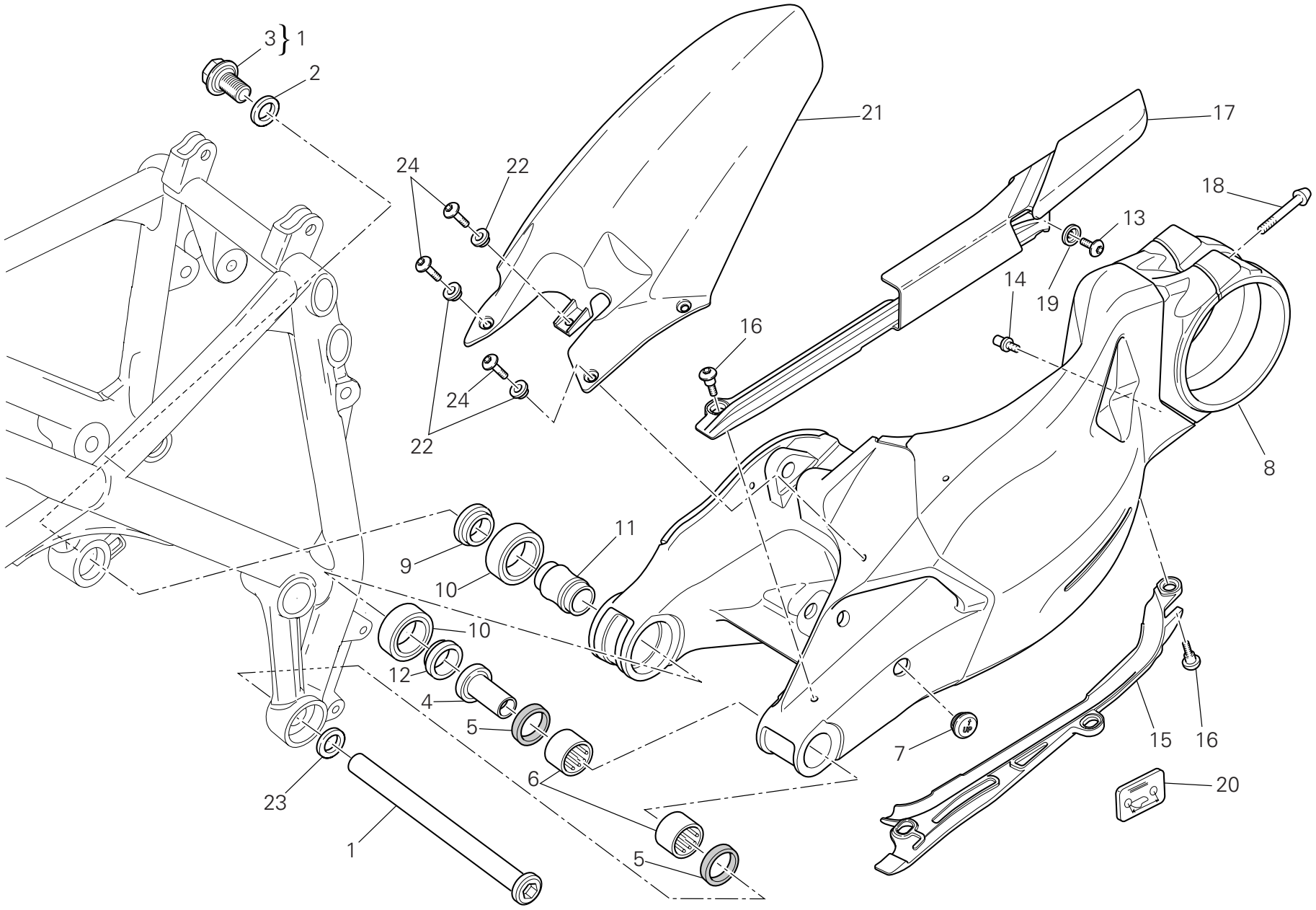

DRAWING 028a Swingarm

| NOTES NO. | CODE NO. | DESCRIPTION | VALIDITY | Q.TY |
|---|---|---|---|---|
| 1 | 369.2.123.3A | Swingarm pivot | | 1 |
| 2 | 852.1.216.1A | Washer | | 1 |
| 3 | 772.1.078.2A | Special screw | | 1 |
| 4 | 710.1.109.1A | Bush | | 1 |
| 5 | 930.5.012.1A | Seal ring | | 2 |
| 6 | 701.4.017.1A | Needle bearing | | 2 |
| 7 | 872.1.054.2A | Cap | | 1 |
| 8 | 370.1.089.1A | Swingarm | | 1 |
| 9 | 712.1.029.1A | Spacer | | 1 |
| 10 | 702.5.045.1A | Bearing | | 2 |
| 11 | 713.1.187.1A | Spacer | | 1 |
| 12 | 712.1.030.1A | Spacer | | 1 |
| 13 | 775.1.019.1A | Screw | | 1 |
| 14 | 832.1.003.1C | Pin | | 1 |
| 15 | 447.1.079.1A | Lower chain sliding shoe | | 1 |
| 16 | 779.1.440.1B | Screw | | 4 |
| 17 | 447.1.078.1A | Upper chain sliding shoer | | 1 |
| 18 | 779.1.503.1A | Screw | | 1 |
| 19 | 841.1.050.1A | Retainer | | 1 |
| 20 | 433.1.352.1A | Chain adjustment sticker | | 1 |
| 21 | 565.1.044.1B | Rear mudguard | | 1 |
| 22 | 716.1.401.1A | Spacer | | 4 |
| 23 | 852.1.144.1A | Spacer th. 1,4 | | 1 |
| 24 | 772.1.088.2B | Screw | | 3 |

| NOTES NO. | CODE NO. | DESCRIPTION | VALIDITY | Q.TY |
|---|---|---|---|---|



CATALOGUE No: 915.1.289.1B
ISSUED: 04 - 09

DRAWING 029 Air intake - oil breather

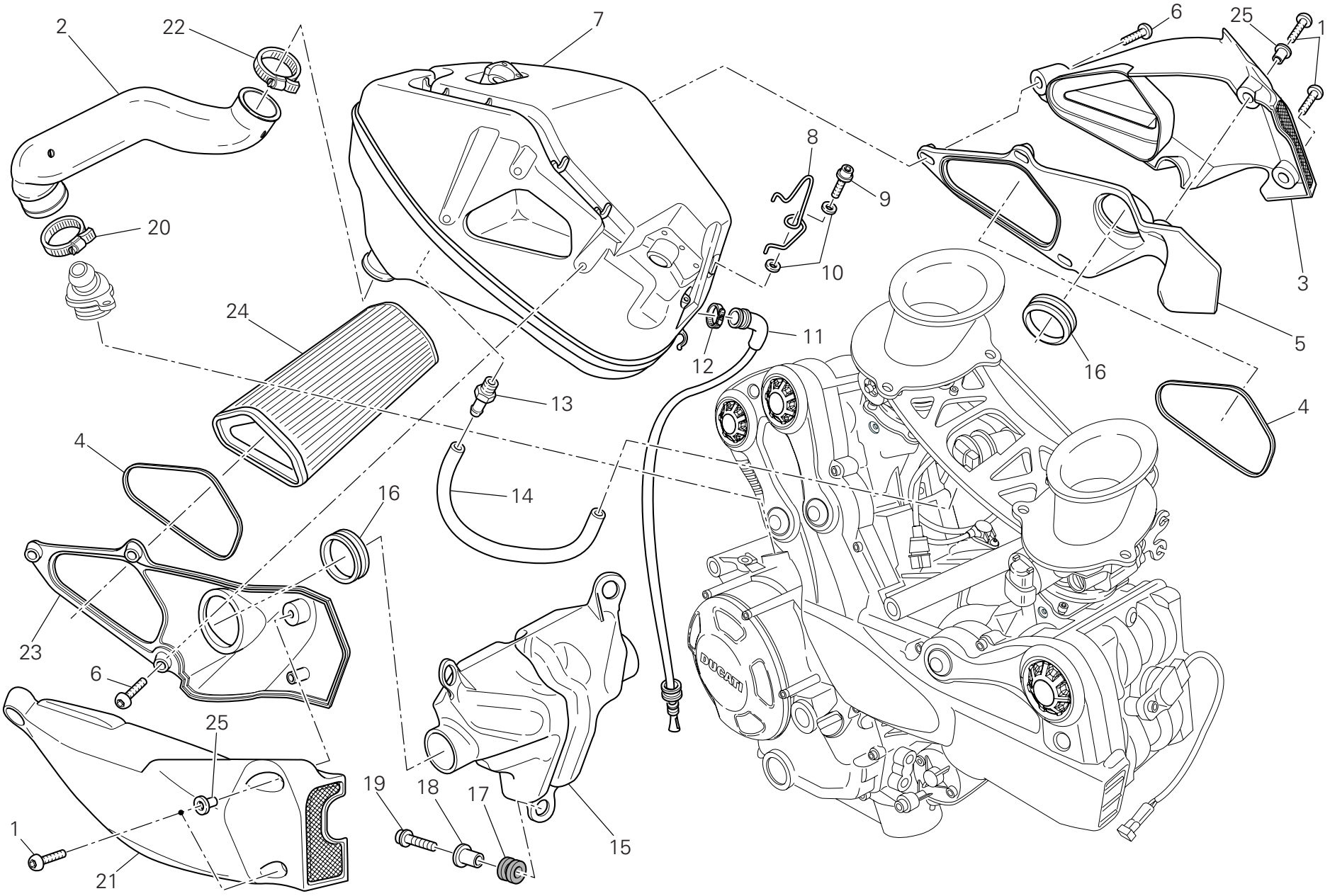

DRAWING 029 Air intake - oil breather

| NOTES NO. | CODE NO. | DESCRIPTION | VALIDITY | Q.TY |
|---|---|---|---|---|
| 1 | 772.1.109.1A | Screw | | 4 |
| 2 | 876.1.102.2B | Breather pipe | | 1 |
| 3 | 484.2.075.1A | Air manifold (external) (L.H.) | | 1 |
| 4 | 788.1.098.1A | Gasket | | 2 |
| 5 | 484.1.077.1A | Air manifold (internal) (L.H.) | | 1 |
| 6 | 772.1.042.2A | Screw | | 6 |
| 7 | 442.1.139.3B | Air filter box | | 1 |
| 8 | 758.1.036.1A | Fairlead | | 1 |
| 9 | 773.1.005.1A | Screw | | 1 |
| 10 | 852.4.021.1A | Washer | | 2 |
| 11 | 877.2.006.1B | Tube | | 1 |
| 12 | 741.4.063.1A | Hose guide | | 1 |
| 13 | 814.1.311.1A | Pressure pick-up point | | 1 |
| 14 | 934.1.010.1A | Tube | | 1 |
| 15 | 442.1.184.1A | Expansion tank | | 1 |
| 16 | 791.1.067.1A | Gasket | | 2 |
| 17 | 764.1.090.1A | Rubber pad | | 3 |
| 18 | 716.1.143.1A | Spacer | | 3 |
| 19 | 771.1.226.1A | Screw | | 3 |
| 20 | 741.4.186.1A | Clamp | | 1 |
| 21 | 484.2.076.1A | Air manifold (external) (R.H.) | | 1 |
| 22 | 741.4.165.1A | Clamp | | 1 |
| 23 | 484.1.078.1A | Air manifold (internal) (R.H.) | | 1 |
| 24 | 426.1.020.1A | Air filter | | 1 |
| 25 | 716.1.407.1A | Spacer | | 2 |

| NOTES NO. | CODE NO. | DESCRIPTION | VALIDITY | Q.TY |
|---|---|---|---|---|



CATALOGUE No: 915.1.289.1B
ISSUED: 04 - 09

DRAWING 030 Radiator

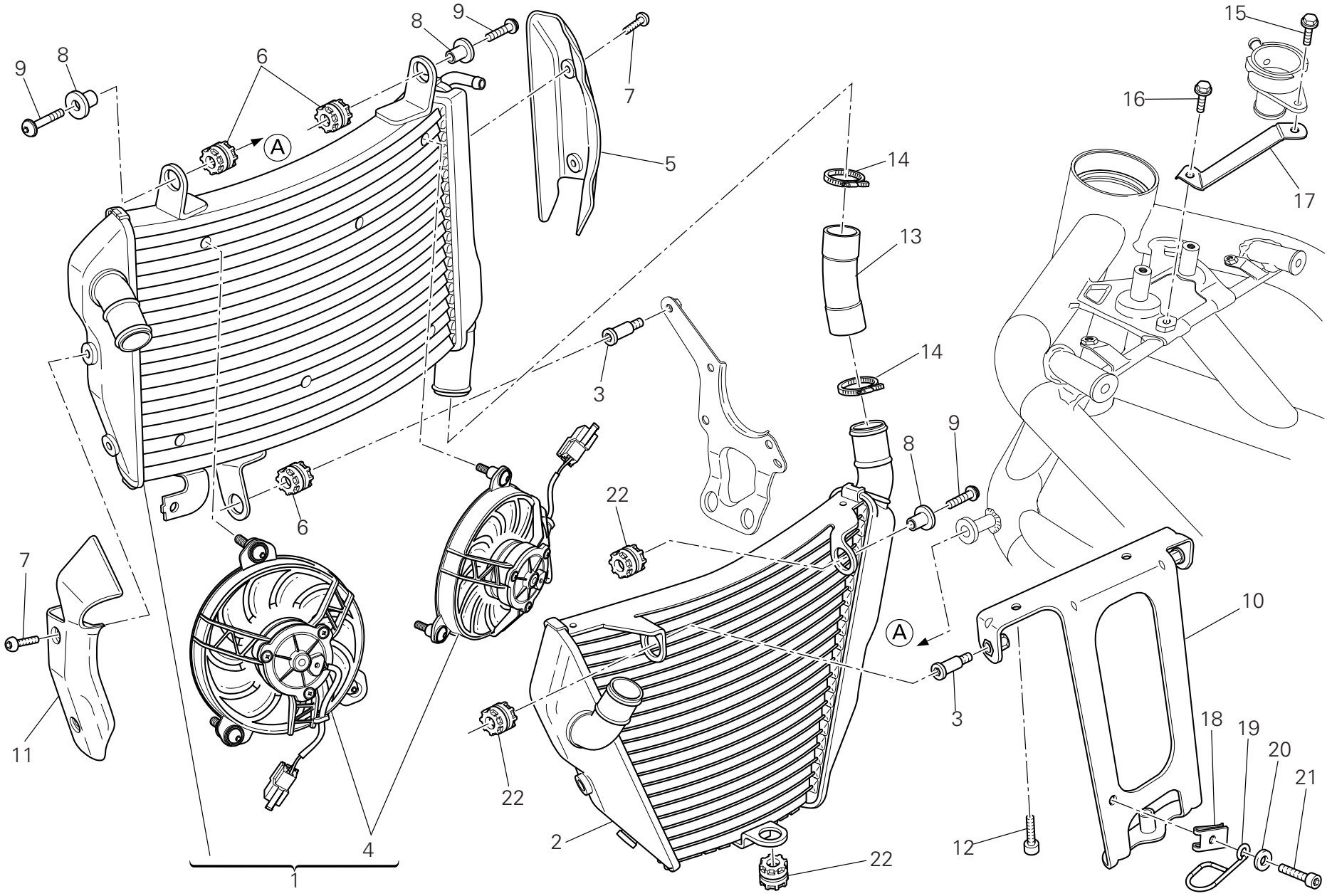

DRAWING 030 Radiator

| NOTES NO. | CODE NO. | DESCRIPTION | VALIDITY | Q.TY |
|---|---|---|---|---|
| 1 | 548.4.083.1A | Water radiator (upper) | | 1 |
| 2 | 548.4.084.1A | Water radiator (bottom) | | 1 |
| 3 | 779.1.202.1B | Special screw | | 2 |
| 4 | 550.4.020.1A | Electric fan | | 2 |
| 5 | 460.1.366.1A | Cooler cowling (R.H.) | | 1 |
| 6 | 764.1.022.1A | Vibration damper pad | | 3 |
| 7 | 775.1.054.1A | Screw | | 4 |
| 8 | 716.1.419.1A | Spacer | | 3 |
| 9 | 772.4.046.3C | Screw | | 3 |
| 10 | 829.2.766.1A | Holder (bottom) | | 1 |
| 11 | 460.1.367.1A | Cooler cowling (L.H.) | | 1 |
| 12 | 771.5.064.8B | Screw | | 2 |
| 13 | 800.1.170.2A | Tube | | 1 |
| 14 | 741.4.190.1A | Clamp | | 2 |
| 15 | 772.1.047.1B | Screw | | 1 |
| 16 | 772.1.059.1A | Screw | | 1 |
| 17 | 684.1.073.1A | Stud bolt | | 1 |
| 18 | 850.4.038.1A | Quik fastening | | 1 |
| 19 | 881.1.023.1A | Ring | | 1 |
| 20 | 852.5.027.1A | Washer | | 1 |
| 21 | 772.1.061.1A | Screw | | 1 |
| 22 | 764.1.024.1A | Vibration damper pad | | 3 |

| NOTES NO. | CODE NO. | DESCRIPTION | VALIDITY | Q.TY |
|---|---|---|---|---|



CATALOGUE No: 915.1.289.1B
ISSUED: 04 - 09

DRAWING 031 Cooling system

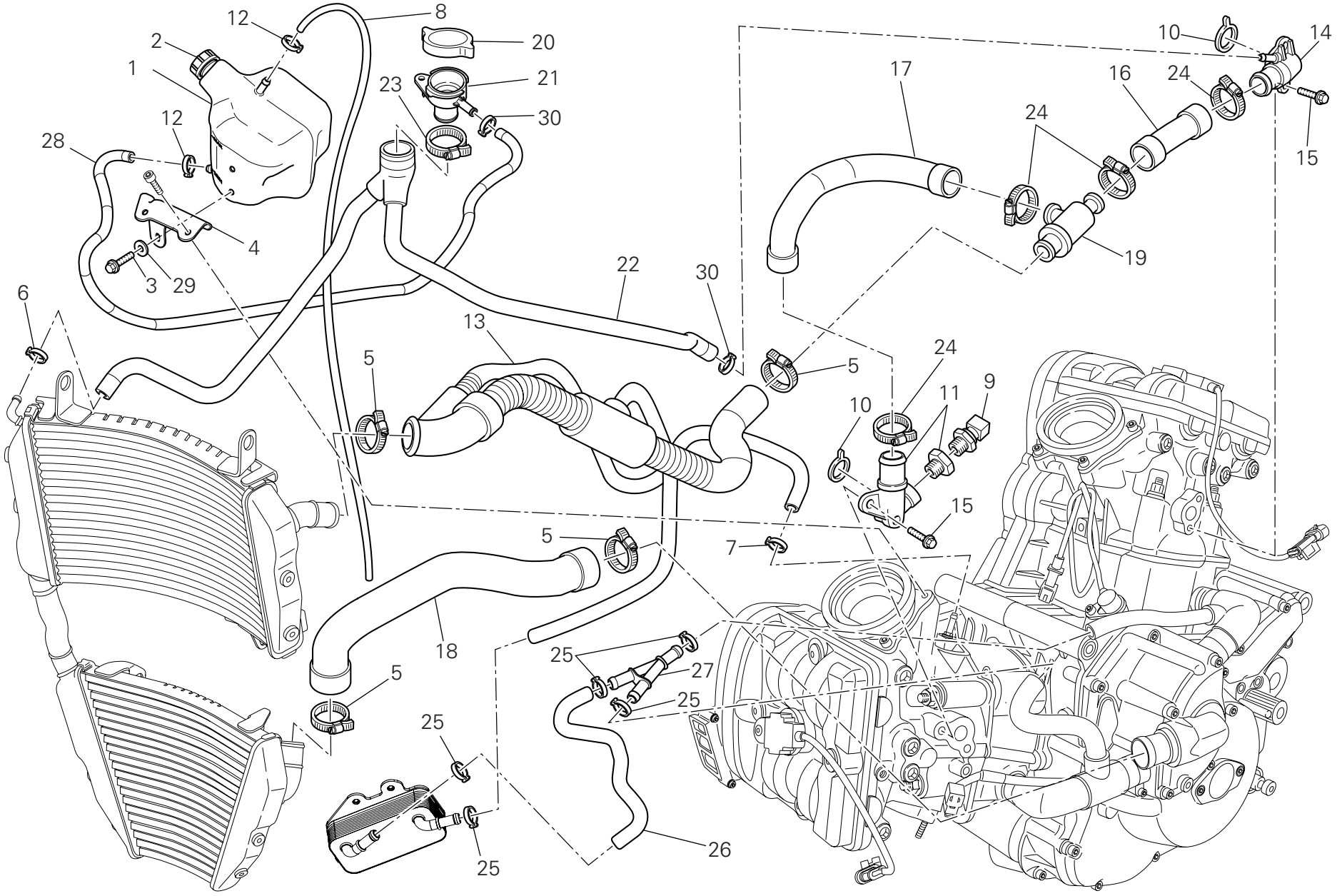

DRAWING 031 Cooling system

| NOTES NO. | CODE NO. | DESCRIPTION | VALIDITY | Q.TY |
|---|---|---|---|---|
| 1 | 585.1.064.1A | Water tank | | 1 |
| 2 | 893.1.007.1A | Tank cap | | 1 |
| 3 | 772.1.059.1A | Screw | | 2 |
| 4 | 830.1.441.1A | Bracket | | 1 |
| 5 | 741.4.190.1A | Clamp | | 4 |
| 6 | 741.4.153.1A | Clamp | | 1 |
| 7 | 741.4.013.1B | Hose guide | | 1 |
| 8 | 934.1.006.1A | Breather pipe | | 1 |
| 9 | 552.4.013.1A | Sensor | | 1 |
| 10 | 886.4.103.1A | O-ring | | 2 |
| 11 | 814.1.236.1C | Water outlet union (horizontal) | | 1 |
| 12 | 8A00.67610 | Hose guide | | 2 |
| 13 | 800.1.171.1A | Cooler/thermostat hose | | 1 |
| 14 | 814.1.326.1A | Water outlet union (vertical) | | 1 |
| 15 | 772.1.062.1A | Screw | | 4 |
| 16 | 800.1.172.1A | Thermostat/pump hose (vertical) | | 1 |
| 17 | 800.1.173.1A | Thermostat/pump hose (horizontal) | | 1 |
| 18 | 800.1.169.1A | Pump/cooler hose | | 1 |
| 19 | 553.4.004.1A | Thermostat | | 1 |
| 20 | 872.4.060.1A | Cap | | 1 |
| 21 | 668.4.001.1A | Filler | | 1 |
| 22 | 800.1.177.1A | Cooler/cap hose | | 1 |
| 23 | 741.4.156.1A | Clamp | | 1 |
| 24 | 741.4.192.1A | Clamp | | 4 |
| 25 | 741.4.130.1A | Clamp | | 5 |
| 26 | 800.1.176.1A | Rubber hose | | 1 |
| 27 | 814.1.327.1A | Union "Y" | | 1 |
| 28 | 934.1.012.1A | Tube | | 1 |
| 29 | 852.1.176.1A | Washer | | 2 |
| 30 | 741.4.198.1A | Clamp | | 2 |



CATALOGUE No: 915.1.289.1B
ISSUED: 04 - 09

DRAWING 032 Fuel tank

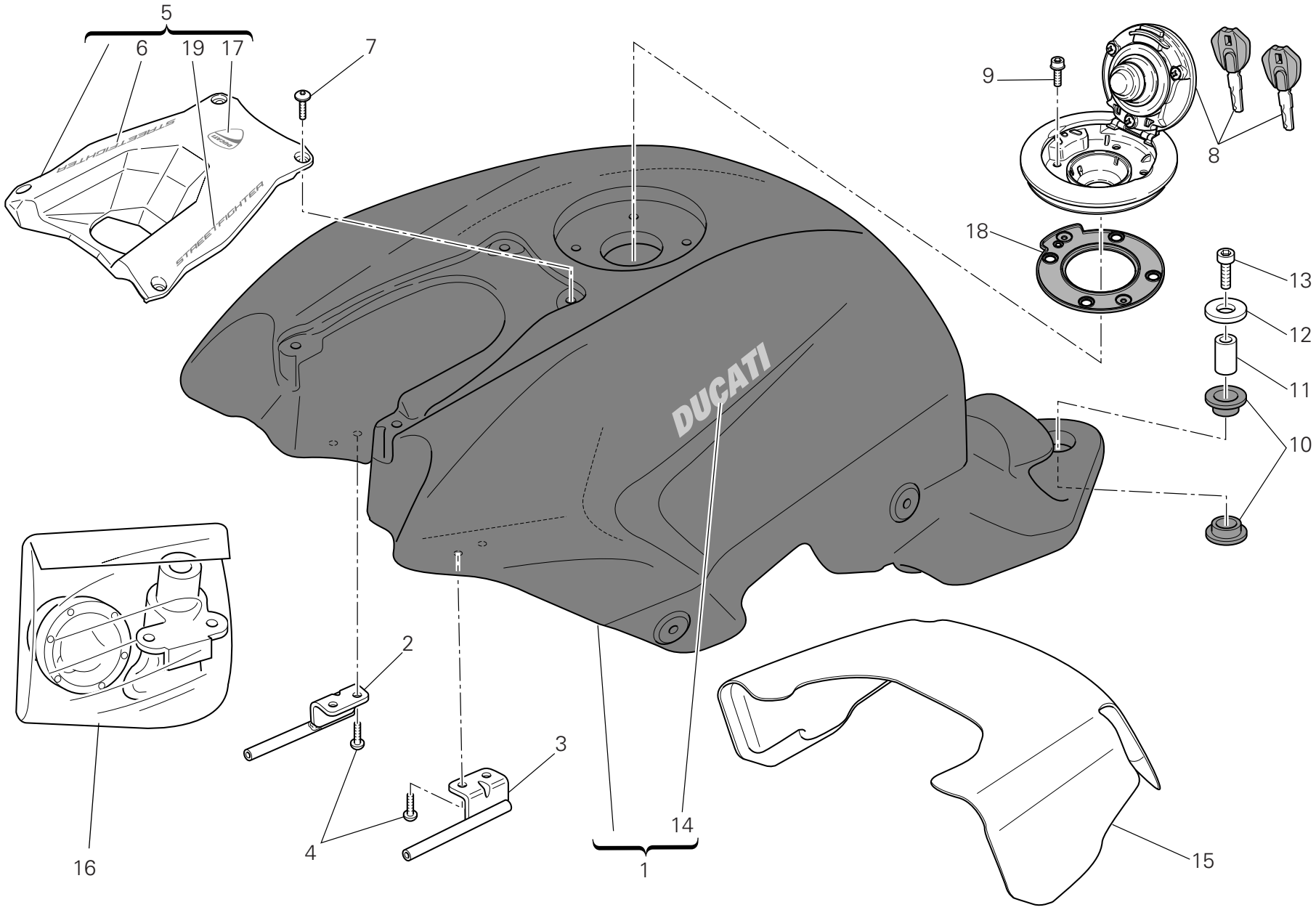

DRAWING 032 Fuel tank

| NOTES NO. | CODE NO. | DESCRIPTION | VALIDITY | Q.TY |
|---|---|---|---|---|
| 1 | 586.1.172.1AA | Tank (RED) | | 1 |
| 1 | 586.1.172.1AW | Tank (WHITE) | | 1 |
| 2 | 587.1.051.2A | Tank front connection (R.H.) | | 1 |
| 3 | 587.1.052.2A | Tank front connection (L.H.) | | 1 |
| 4 | 772.1.050.1C | Screw | | 4 |
| 5 | 480.2.269.1A | Cover | | 1 |
| 6 | 438.1.080.1A | Decal "Streetfighter" (R.H.) | | 1 |
| 7 | 775.1.051.1B | Screw | | 4 |
| 8 | 895.2.020.1A | Tank cap | | 1 |
| 9 | 771.5.640.8B | Screw | | 4 |
| 10 | 764.1.001.1A | Rubber pad | | 2 |
| 11 | 713.1.330.1A | Spacer | | 1 |
| 12 | 852.1.099.1A | Washer | | 1 |
| 13 | 771.5.728.8B | Screw | | 1 |
| 14 | 438.1.365.1AA | Sticker "DUCATI" (for RED) | | 2 |
| 14 | 438.1.365.1AT | Sticker "DUCATI" (for WHITE) | | 2 |
| 15 | 486.1.081.1A | Panel | | 1 |
| 16 | 598.2.064.1C | Locks kit | | 1 |
| 17 | 438.1.082.1A | Sticker "DUCATI" | | 1 |
| 18 | 866.4.006.1A | Gasket | | 1 |
| 19 | 438.1.083.1A | Decal "Streetfighter" (L.H.) | | 1 |

| NOTES NO. | CODE NO. | DESCRIPTION | VALIDITY | Q.TY |
|---|---|---|---|---|



CATALOGUE No: 915.1.289.1B
ISSUED: 04 - 09

DRAWING 032a Fuel system

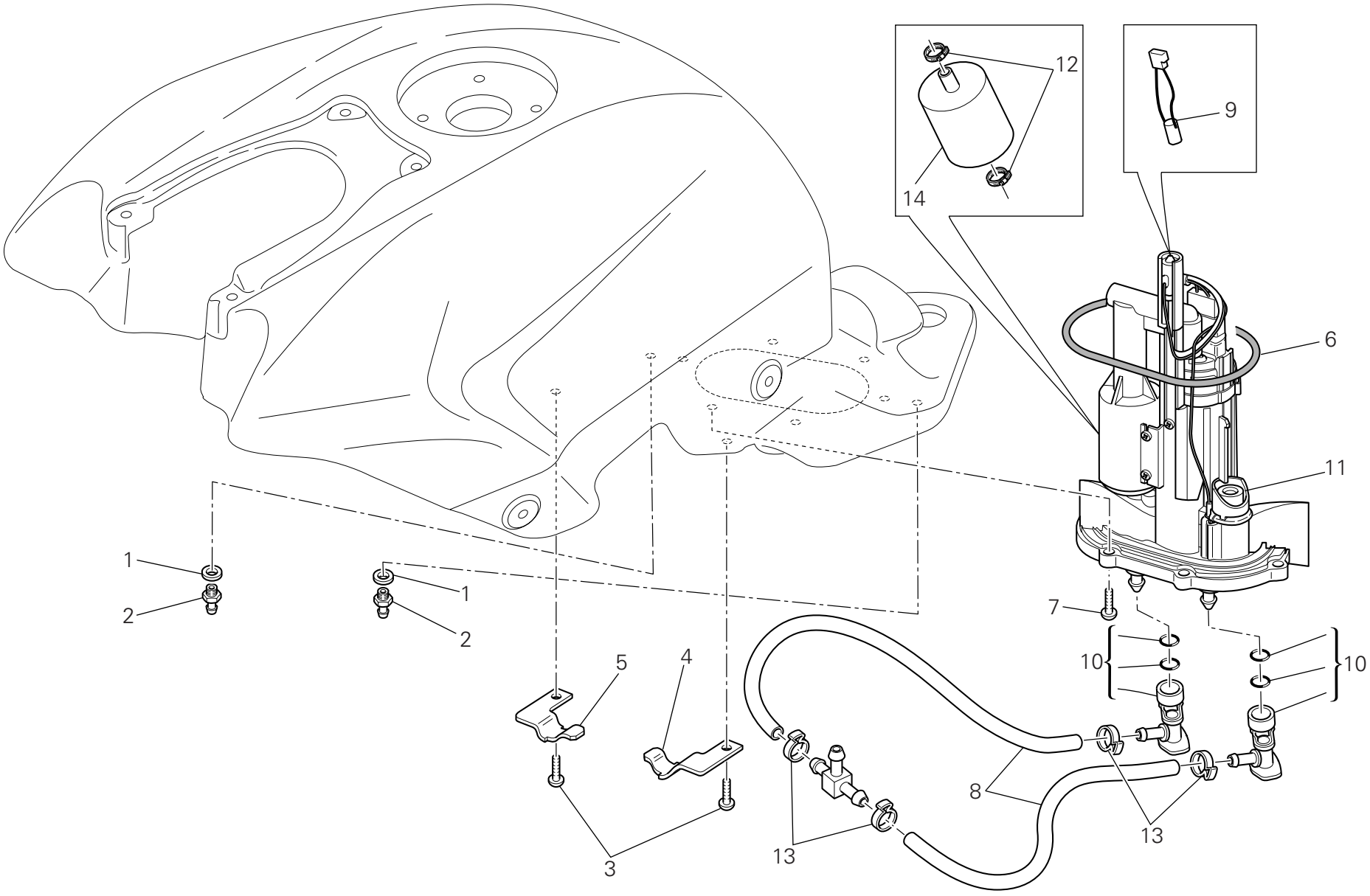

DRAWING 032a Fuel system

| NOTES NO. | CODE NO. | DESCRIPTION | VALIDITY | Q.TY |
|---|---|---|---|---|
| 1 | 886.1.013.1A | Gasket | | 2 |
| 2 | 814.1.179.1A | Union | | 2 |
| 3 | 775.1.051.1A | Screw | | 2 |
| 4 | 830.1.555.1A | Plate (L.H.) | | 1 |
| 5 | 830.1.554.1A | Plate (R.H.) | | 1 |
| 6 | 886.5.048.1A | O-Ring | | 1 |
| 7 | 771.1.044.1A | Screw | | 6 |
| 8 | 590.1.360.1A | Tube | | 2 |
| 9 | 552.4.048.1A | Thermistor | | 1 |
| 10 | 814.4.010.1A | Quick-coupling union | | 2 |
| 11 | 160.2.366.1A | Flange | | 1 |
| 12 | 699.2.345.1A | Clamps kit | | 1 |
| 13 | 287.4.024.1B | Clamp | | 4 |
| 14 | 425.4.004.1B | Fuel filter | | 1 |

| NOTES NO. | CODE NO. | DESCRIPTION | VALIDITY | Q.TY |
|---|---|---|---|---|



CATALOGUE No: 915.1.289.1B
ISSUED: 04 - 09

DRAWING 033 Seat

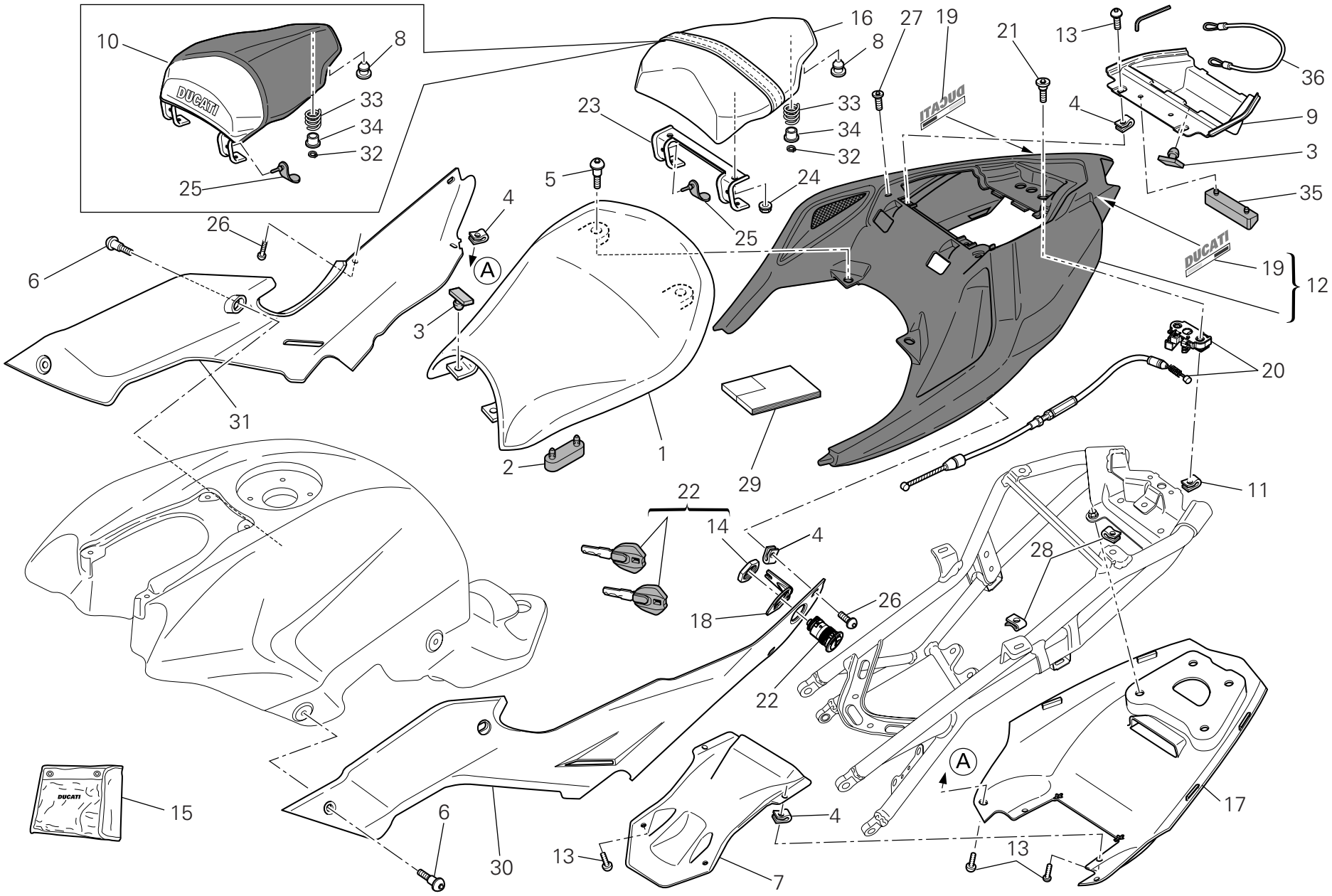

DRAWING 033 Seat

| NOTES NO. | CODE NO. | DESCRIPTION | VALIDITY | Q.TY |
|---|---|---|---|---|
| 1 | 595.1.100.1A | Rider seat | | 1 |
| 2 | 866.1.104.1A | Rubber pad (big) | | 4 |
| 3 | 866.1.118.1A | Rubber pad (little) | | 4 |
| 4 | 850.4.047.1A | Quik fastening | | 10 |
| 5 | 772.1.084.2A | Special screw | | 2 |
| 6 | 772.1.085.3B | Special screw | | 4 |
| 7 | 483.3.082.1B | Tail guard (front) (bottom) | | 1 |
| 8 | 866.1.107.1A | Rubber pad (rear) | | 4 |
| 9 | 483.1.050.3A | Chamber | | 1 |
| 10 | 247.1.342.1AA | Cover seat (RED) | | 1 |
| 10 | 247.1.342.1AW | Cover seat (WHITE) | | 1 |
| 11 | 850.4.038.1A | Quik fastening | | 2 |
| 12 | 483.2.075.1AA | Tail guard (RED) | | 1 |
| 12 | 483.2.075.1AW | Tail guard (WHITE) | | 1 |
| 13 | 772.1.086.1B | Special screw | | 6 |
| 14 | 750.1.155.1A | Special nut | | 1 |
| 15 | 697.2.025.2A | Tool bag | | 1 |
| 16 | 595.1.101.1A | Pillion rider seat | | 1 |
| 17 | 483.1.076.1A | Tail guard (rear) (bottom) | | 1 |
| 18 | 827.1.482.1A | Plate | | 1 |
| 19 | 438.1.081.1A | Sticker "DUCATI" (for RED) | | 2 |
| 19 | 438.1.081.1AT | Sticker "DUCATI" (for WHITE) | | 2 |
| 20 | 598.1.013.1A | Lock latch | | 1 |
| 21 | 779.1.498.1A | Special screw | | 2 |
| 22 | 598.2.061.1A | Seat lock | | 1 |
| 23 | 830.1.564.1A | Hook | | 1 |
| 24 | 749.4.031.1A | Nut | | 4 |

| NOTES NO. | CODE NO. | DESCRIPTION | VALIDITY | Q.TY |
|---|---|---|---|---|
| 25 | 764.1.054.1A | Rubber pad | | 4 |
| 26 | 772.1.109.1A | Screw | | 4 |
| 27 | 779.1.499.2A | Special screw | | 2 |
| 28 | 850.4.055.1A | Quik fastening | | 14 |
| 29 | 913.7.141.1G | Owner's manual | | 1 |
| 30 | 482.1.156.1A | Body panel (L.H.) | | 1 |
| 31 | 482.1.157.1A | Body panel (R.H.) | | 1 |
| 32 | 884.4.025.1A | Circlip | | 2 |
| 33 | 799.1.175.1A | Spring | | 2 |
| 34 | 841.1.037.1A | Retainer | | 2 |
| 35 | 866.1.108.2A | Battery resting buffer | | 1 |
| 36 | 732.1.017.1A | Helmet anti-theft wire | | 1 |



CATALOGUE No: 915.1.289.1B
ISSUED: 04 - 09

DRAWING 034 Half fairing

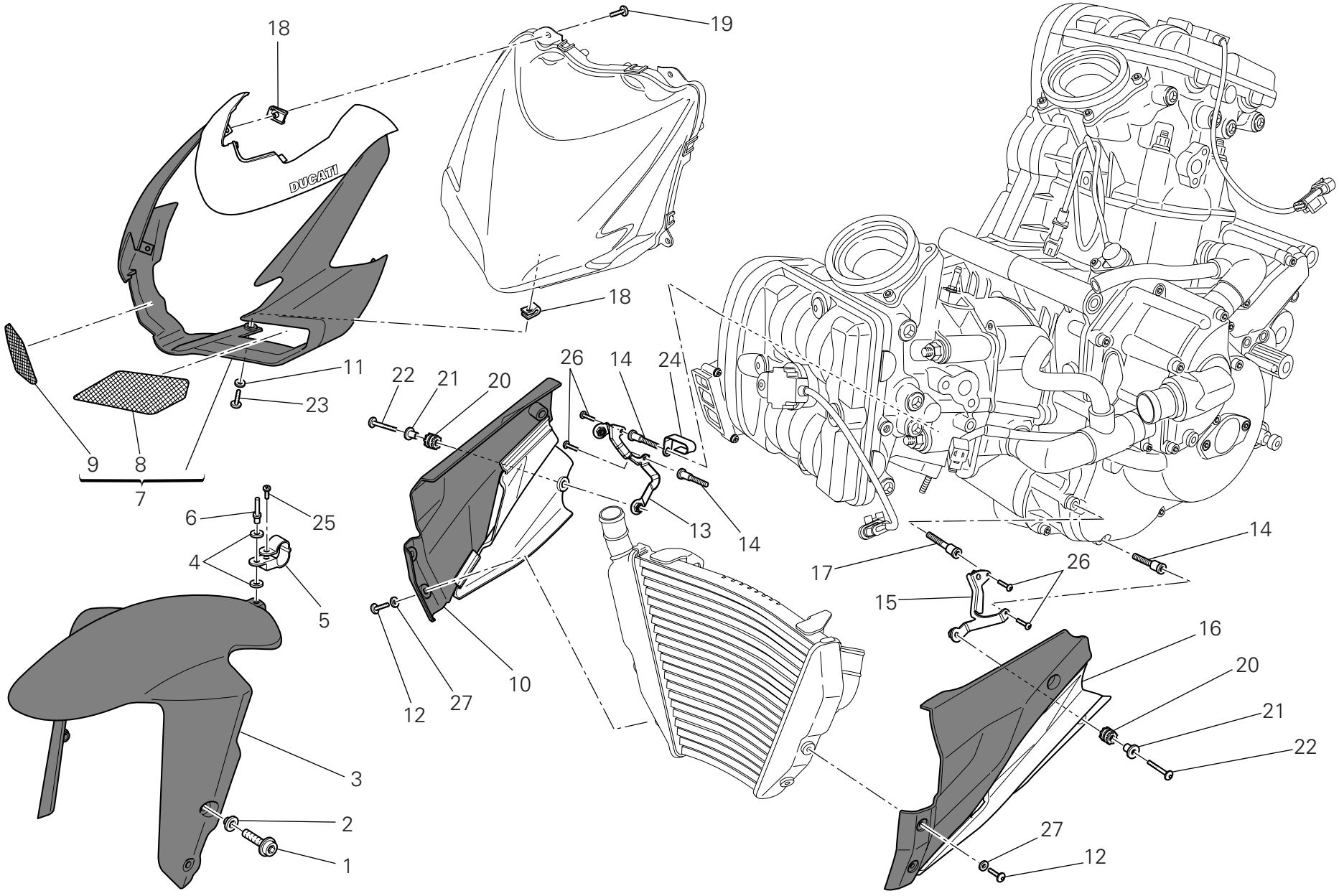

DRAWING 034 Half fairing

| NOTES NO. | CODE NO. | DESCRIPTION | VALIDITY | Q.TY |
|---|---|---|---|---|
| 1 | 772.1.089.3B | Screw | | 4 |
| 2 | 716.1.401.1B | Spacer | | 4 |
| 3 | 564.2.062.1AA | Front mudguard (RED) | | 1 |
| 3 | 564.2.062.1AW | Front mudguard (WHITE) | | 1 |
| 4 | 852.1.075.1B | Washer | | 2 |
| 5 | 850.1.209.1A | Hose guide | | 1 |
| 6 | 736.4.013.1B | Shear rivet | | 1 |
| 7 | 481.2.056.1AA | Headlight fairing (RED) | | 1 |
| 7 | 481.2.056.1AW | Headlight fairing (WHITE) | | 1 |
| 8 | 460.1.387.1A | Net (L.H.) | | 1 |
| 9 | 460.1.386.1A | Net (R.H.) | | 1 |
| 10 | 480.2.281.1AA | Push rod (R.H.) (RED) | | 1 |
| 10 | 480.2.281.1AW | Push rod (R.H.) (WHITE) | | 1 |
| 11 | 852.1.119.1A | Washer | | 1 |
| 12 | 772.1.102.1A | Screw | | 4 |
| 13 | 827.1.531.1A | Holder (R.H.) | | 1 |
| 14 | 779.1.605.1A | Special screw | | 3 |
| 15 | 827.1.530.1A | Holder (L.H.) | | 1 |
| 16 | 480.2.280.1AA | Push rod (L.H.) (RED) | | 1 |
| 16 | 480.2.280.1AW | Push rod (L.H.) (WHITE) | | 1 |
| 17 | 779.1.618.1A | Special screw | | 1 |
| 18 | 850.4.047.1A | Quik fastening | | 5 |
| 19 | 772.1.085.3B | Special screw | | 4 |
| 20 | 764.1.022.1A | Vibration damper pad | | 4 |
| 21 | 716.1.003.1A | Spacer | | 4 |
| 22 | 772.4.046.3C | Screw | | 4 |
| 23 | 772.1.109.1A | Screw | | 1 |
| 24 | 830.1.494.1B | Fairlead | | 1 |
| 25 | 774.4.010.1A | Screw | | 1 |
| 26 | 775.5.025.1A | Screw | | 4 |
| 27 | 856.1.042.1A | Nylon washer | | 4 |



CATALOGUE No: 915.1.289.1B
ISSUED: 04 - 09

DRAWING 035 Evaporative emissions canister

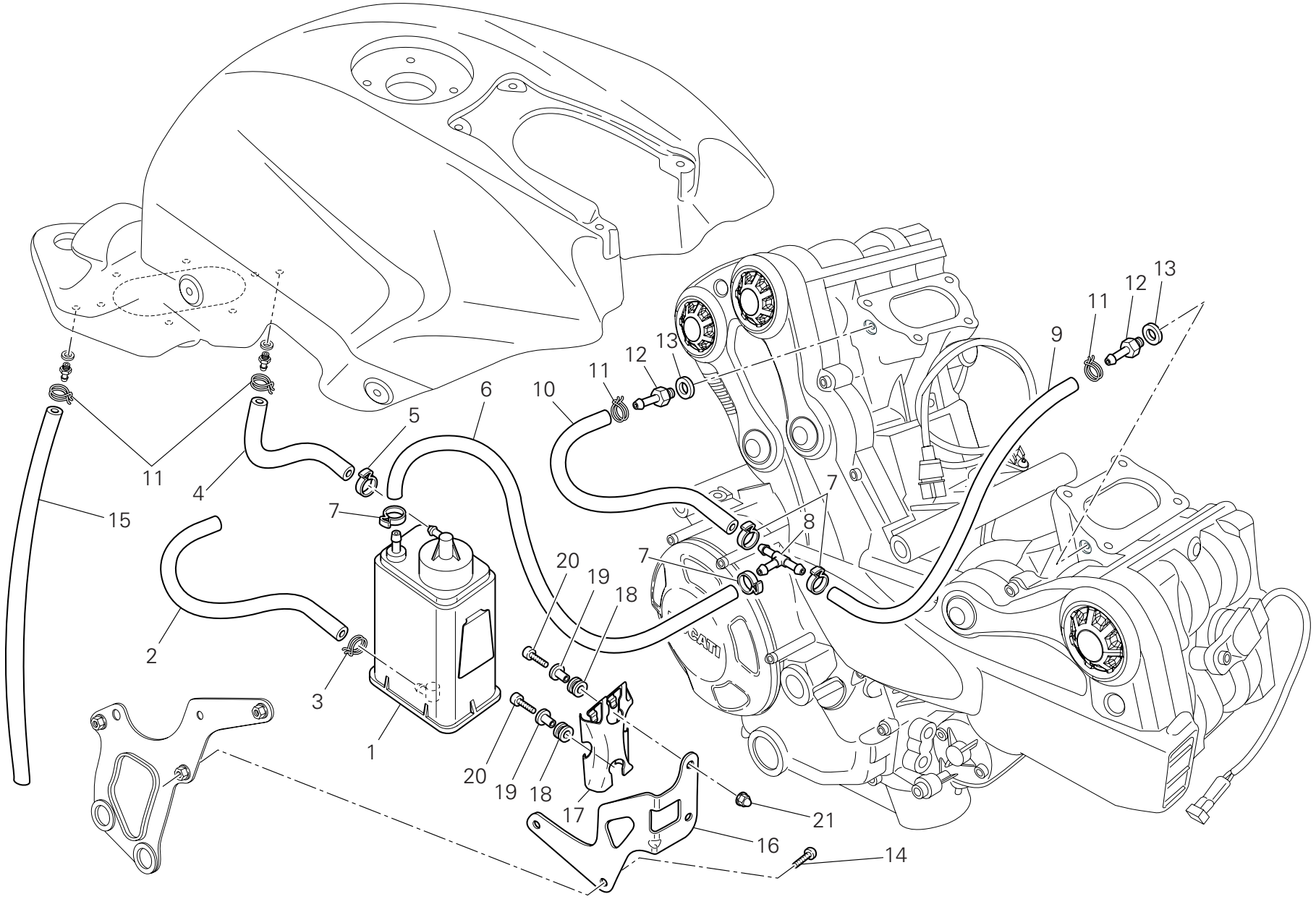

DRAWING 035 Evaporative emissions canister

| NOTES NO. | CODE NO. | DESCRIPTION | VALIDITY | Q.TY |
|---|---|---|---|---|
| 1 | 426.1.007.1B | Canister filter | | 1 |
| 2 | 590.1.245.1A | Tube 7x13x335 | | 1 |
| 3 | 741.4.057.1A | Hose guide | | 1 |
| 4 | 590.1.307.1B | Tube | | 1 |
| 5 | 741.4.063.1A | Hose guide | | 1 |
| 6 | 590.1.350.1A | Tube | | 1 |
| 7 | 741.4.058.1A | Clamp | | 4 |
| 8 | 814.1.183.1A | Shunt valve | | 1 |
| 9 | 590.1.348.1A | Tube | | 1 |
| 10 | 590.1.349.1A | Tube | | 1 |
| 11 | 741.4.043.1A | Hose guide | | 4 |
| 12 | 814.1.111.3B | Union | | 2 |
| 13 | 852.5.023.1A | Gasket | | 2 |
| 14 | 775.5.021.1A | Screw | | 2 |
| 15 | 590.1.351.1A | Tube | | 1 |
| 16 | 830.1.465.1A | Bracket | | 1 |
| 17 | 827.1.157.1A | Plate | | 1 |
| 18 | 764.1.029.1A | Rubber pad | | 2 |
| 19 | 716.1.043.1C | Spacer | | 2 |
| 20 | 771.5.064.8B | Screw | | 2 |
| 21 | 749.1.002.1A | Special nut | | 2 |

| NOTES NO. | CODE NO. | DESCRIPTION | VALIDITY | Q.TY |
|---|---|---|---|---|



CATALOGUE No: 915.1.289.1B
ISSUED: 04 - 09

DRAWING 036 Data plate positions

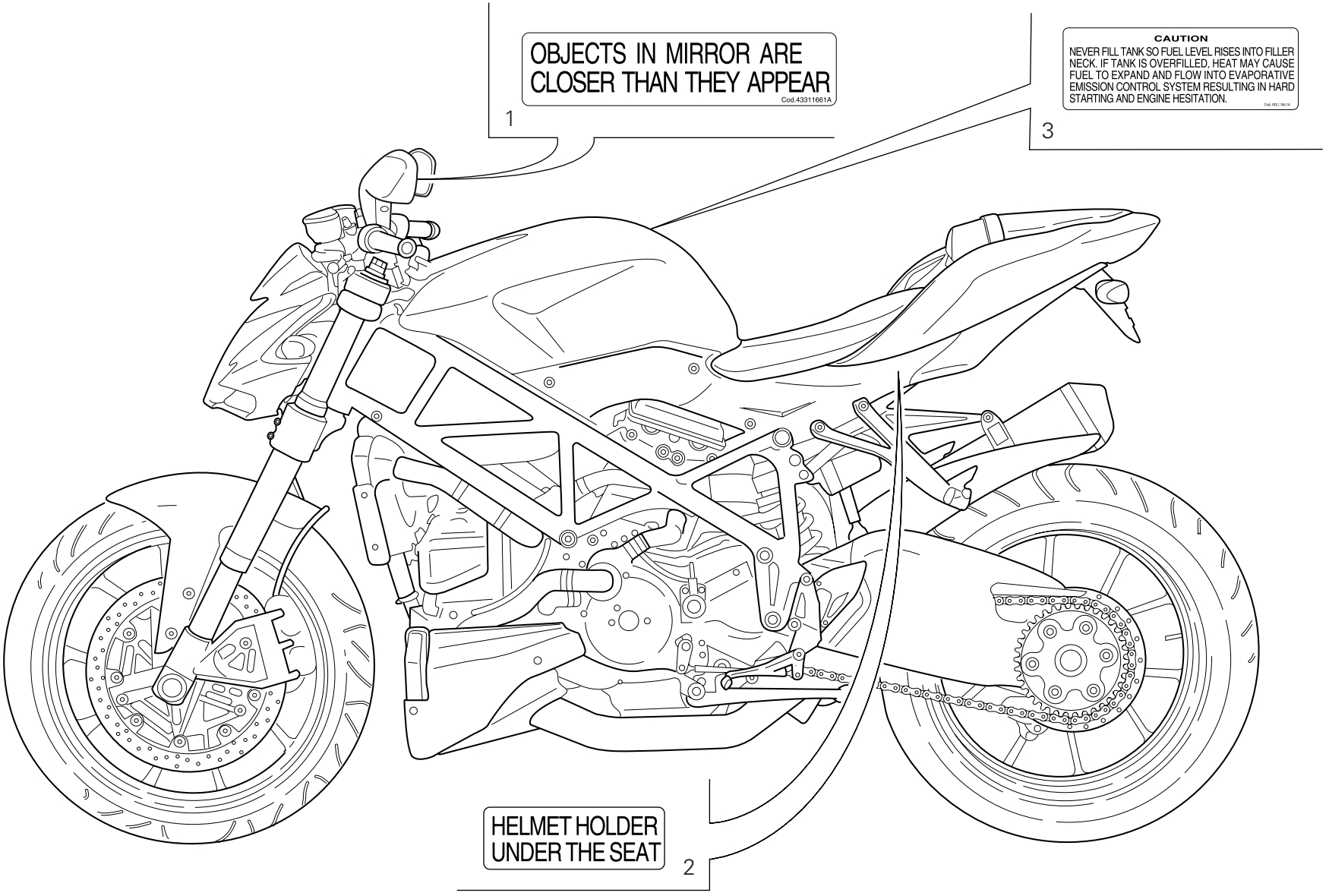

DRAWING 036 Data plate positions

| NOTES NO. | CODE NO. | DESCRIPTION | VALIDITY | Q.TY |
|---|---|---|---|---|
| 1 | 433.1.166.1A | Label | | 2 |
| 2 | 433.1.170.1A | Sticker | | 1 |
| 3 | 433.1.164.1A | Sticker | | 1 |

| NOTES NO. | CODE NO. | DESCRIPTION | VALIDITY | Q.TY |
|---|---|---|---|---|



CATALOGUE No: 915.1.289.1B
ISSUED: 04 - 09

Index


| CODE No. | Drwg. | POS. N. | CODE No. | Drwg. | POS. N. | CODE No. | Drwg. | POS. N. | CODE No. | Drwg. | POS. N. | CODE No. | Drwg. | POS. N. |
|---|---|---|---|---|---|---|---|---|---|---|---|---|---|---|
| 0124.40.060 | 008 | 15 | 120.2.150.4AB | 007 | 5 | 172.1.002.1B | 003 | 10 | 208.1.029.1A | 015 | 3 | 254.4.001.2A | 005 | 4 |
| 0251.47.054 | 003 | 1 | 120.2.151.4AB | 007 | 10 | 172.1.003.3C | 003 | 8 | 209.1.035.1A | 014 | 16 | 255.1.010.4B | 008 | 18 |
| 0272.91.090 | 002 | 8 | 121.1.078.1B | 007 | 3 | 172.1.004.3C | 003 | 5 | 209.1.035.1A | 015 | 16 | 255.1.019.3A | 013 | 7 |
| 0370.49.250 | 010 | 22 | 121.1.079.1A | 007 | 2 | 172.1.005.3C | 003 | 9 | 209.1.036.1A | 014 | 4 | 264.4.053.2A | 011 | 37 |
| 0370.72.020 | 023 | 8 | 121.2.051.2A | 007 | 4 | 172.1.008.1C | 003 | 22 | 209.1.036.1A | 015 | 4 | 264.4.059.1A | 011 | 1 |
| 0370.72.020 | 024 | 12 | 122.2.167.2A | 007 | 1 | 172.1.009.1C | 003 | 21 | 210.1.072.1A | 014 | 14 | 270.4.010.1A | 012 | 1 |
| 0400.09.050 | 002 | 21 | 135.1.023.2A | 017 | 7 | 172.1.010.3C | 003 | 20 | 210.1.072.1A | 015 | 14 | 276.1.038.2A | 012 | 16 |
| 0400.29.125 | 002 | 31 | 140.1.048.1B | 017 | 1 | 172.1.011.3C | 003 | 23 | 211.1.070.1B | 014 | 5 | 280.4.016.1A | 017 | 13 |
| 0400.29.126 | 002 | 31 | 146.2.143.1A | 006 | 1 | 172.1.218.2A | 003 | 18 | 211.1.070.1B | 015 | 5 | 282.4.079.1B | 017 | 11 |
| 0660.13.143 | 002 | 9 | 147.1.014.2A | 008 | 3 | 172.1.219.2A | 003 | 24 | 225.2.248.1A | 010 | 1 | 283.4.024.1A | 017 | 15 |
| 0660.13.165 | 002 | 25 | 148.2.306.2A | 013 | 15 | 173.1.022.1A | 012 | 14 | 242.2.074.1AC | 011 | 13 | 286.2.040.1B | 018a | 6 |
| 0660.16.145 | 004 | 21 | 148.2.307.2A | 013 | 11 | 174.1.038.1A | 009 | 12 | 243.2.115.1AE | 005 | 21 | 286.4.174.1C | 018 | 13 |
| 0665.49.680 | 005 | 22 | 148.2.308.2A | 013 | 14 | 174.2.038.1A | 009 | 1 | 243.2.125.1AC | 005 | 1 | 286.4.174.1D | 018 | 13 |
| 0670.16.145 | 003 | 7 | 148.2.309.2A | 013 | 18 | 176.1.020.1A | 012 | 10 | 245.1.105.1A | 008 | 2 | 287.4.024.1B | 032a | 13 |
| 0670.16.150 | 003 | 3 | 149.1.061.1A | 003 | 25 | 180.1.001.1A | 002 | 11 | 245.1.106.1A | 008 | 1 | 301.2.238.4BB | 015 | 22 |
| 0670.16.155 | 003 | 19 | 150.2.092.3A | 003 | 28 | 180.1.002.1A | 002 | 12 | 245.2.107.1A | 008 | 29 | 301.2.239.4BB | 014 | 22 |
| 0670.16.170 | 003 | 26 | 150.2.105.1A | 003 | 2 | 180.1.008.1A | 002 | 24 | 247.1.287.1B | 013 | 5 | 303.1.051.1BB | 014 | 7 |
| 0670.49.310 | 009 | 17 | 150.2.106.1A | 003 | 27 | 182.2.028.3A | 002 | 18 | 247.1.288.1B | 013 | 6 | 303.1.051.1BB | 015 | 7 |
| 0691.91.030 | 018a | 17 | 158.2.020.2A | 006 | 5 | 184.1.010.2A | 025 | 20 | 247.1.290.1AB | 009 | 19 | 303.1.051.1BC | 014 | 7 |
| 0759.49.280 | 009 | 15 | 160.1.094.1A | 013 | 10 | 187.1.002.1A | 023 | 3 | 247.1.305.1AF | 011 | 23 | 303.1.051.1BC | 015 | 7 |
| 0765.92.205 | 002 | 21 | 160.1.367.4A | 019 | 37 | 187.1.002.1A | 024 | 22 | 247.1.333.1A | 027a | 13 | 303.1.051.1BD | 014 | 7 |
| 0799.13.110 | 002 | 27 | 160.1.369.2B | 026a | 5 | 190.2.020.1A | 004 | 8 | 247.1.335.1A | 020 | 26 | 303.1.051.1BD | 015 | 7 |
| 112.1.012.1AB | 006 | 8 | 160.1.370.1A | 012 | 13 | 194.2.043.1A | 004 | 12 | 247.1.342.1AA | 033 | 10 | 304.1.063.1A | 014 | 10 |
| 112.1.012.1AC | 006 | 8 | 160.2.366.1A | 032a | 11 | 195.4.003.1A | 004 | 22 | 247.1.342.1AW | 033 | 10 | 304.1.063.1A | 015 | 10 |
| 117.1.044.1A | 025 | 18 | 162.1.001.1C | 004 | 7 | 196.1.001.1D | 004 | 10 | 247.1.345.1A | 027a | 20 | 304.1.063.1AB | 014 | 10 |
| 117.1.088.2A | 022 | 8 | 170.2.109.1A | 004 | 17 | 198.1.029.1A | 004 | 13 | 247.2.130.1AC | 011 | 31 | 304.1.063.1AB | 015 | 10 |
| 117.2.006.1A | 004 | 29 | 171.Z.003.1A | 008 | 13 | 208.1.029.1A | 014 | 3 | 251.2.008.1A | 011 | 29 | 304.1.063.1AC | 014 | 10 |




CATALOGUE No: 915.1.289.1B
ISSUED: 04 - 09

Index


| CODE No. | Drwg. | POS. N. | CODE No. | Drwg. | POS. N. | CODE No. | Drwg. | POS. N. | CODE No. | Drwg. | POS. N. | CODE No. | Drwg. | POS. N. |
|---|---|---|---|---|---|---|---|---|---|---|---|---|---|---|
| 304.1.063.1AC | 015 | 10 | 349.1.229.1A | 021a | 15 | 390.4.026.1A | 020 | 20 | 447.1.078.1A | 028a | 17 | 464.1.055.1A | 022 | 12 |
| 304.1.064.1B | 014 | 13 | 349.1.263.1A | 021a | 24 | 390.4.027.1A | 020 | 21 | 447.1.079.1A | 028a | 15 | 464.1.055.1A | 027 | 6 |
| 304.1.064.1B | 015 | 13 | 349.1.283.1A | 021a | 6 | 391.1.003.3A | 027a | 26 | 449.1.053.1A | 003 | 12 | 464.1.056.1A | 022 | 5 |
| 304.1.064.1BB | 014 | 13 | 349.1.284.1A | 021a | 19 | 395.2.013.1C | 018 | 23 | 451.1.017.1A | 008 | 22 | 464.1.056.1A | 027 | 13 |
| 304.1.064.1BB | 015 | 13 | 349.1.288.1A | 021a | 17 | 397.4.007.1A | 018 | 18 | 451.1.018.2A | 008 | 9 | 470.1.198.1AA | 027 | 1 |
| 304.1.064.1BC | 014 | 13 | 349.2.056.1A | 021a | 26 | 406.1.072.4A | 020 | 27 | 451.1.043.1A | 008 | 16 | 470.1.199.1AK | 022 | 1 |
| 304.1.064.1BC | 015 | 13 | 349.2.065.1A | 021a | 25 | 417.6.011.3A | 014 | 20 | 451.1.044.1A | 008 | 4 | 480.2.269.1A | 032 | 5 |
| 341.2.071.1A | 021 | 23 | 360.1.100.1A | 021 | 31 | 420.2.006.4A | 016 | 5 | 451.1.047.1A | 008 | 25 | 480.2.280.1AA | 034 | 16 |
| 342.2.056.1A | 021 | 3 | 360.1.102.1A | 021 | 24 | 425.4.004.1B | 032a | 14 | 455.2.003.1A | 002 | 4 | 480.2.280.1AW | 034 | 16 |
| 344.2.016.1B | 021a | 2 | 360.1.103.1A | 021 | 16 | 426.1.007.1B | 035 | 1 | 456.1.046.1B | 022 | 20 | 480.2.281.1AA | 034 | 10 |
| 345.2.016.1B | 021a | 1 | 361.1.002.1A | 021 | 15 | 426.1.020.1A | 029 | 24 | 456.1.203.1A | 022 | 19 | 480.2.281.1AW | 034 | 10 |
| 349.1.060.1B | 021a | 4 | 364.2.009.1A | 021 | 29 | 433.1.164.1A | 036 | 3 | 457.1.047.1A | 025 | 6 | 481.2.056.1AA | 034 | 7 |
| 349.1.064.1A | 021a | 8 | 365.2.074.1A | 028 | 10 | 433.1.166.1A | 036 | 1 | 460.1.255.1A | 026a | 14 | 481.2.056.1AW | 034 | 7 |
| 349.1.065.1A | 021a | 14 | 369.2.123.3A | 028a | 1 | 433.1.170.1A | 036 | 2 | 460.1.275.1A | 019 | 38 | 482.1.156.1A | 033 | 30 |
| 349.1.098.1A | 021a | 21 | 370.1.089.1A | 028a | 8 | 433.1.352.1A | 028a | 20 | 460.1.286.1B | 019 | 2 | 482.1.157.1A | 033 | 31 |
| 349.1.170.1A | 021a | 10 | 372.2.062.2A | 028 | 8 | 438.1.080.1A | 032 | 6 | 460.1.293.1A | 019 | 26 | 483.1.050.3A | 033 | 9 |
| 349.1.185.1A | 021a | 13 | 380.1.014.5B | 018a | 11 | 438.1.081.1A | 033 | 19 | 460.1.331.1A | 022 | 11 | 483.1.076.1A | 033 | 17 |
| 349.1.186.1A | 021a | 16 | 389.4.019.1A | 018a | 5 | 438.1.081.1AT | 033 | 19 | 460.1.366.1A | 030 | 5 | 483.2.075.1AA | 033 | 12 |
| 349.1.188.1A | 021a | 23 | 389.4.020.1A | 018a | 5 | 438.1.082.1A | 032 | 17 | 460.1.367.1A | 030 | 11 | 483.2.075.1AW | 033 | 12 |
| 349.1.189.1A | 021a | 22 | 389.4.021.1A | 018a | 5 | 438.1.083.1A | 032 | 19 | 460.1.386.1A | 034 | 9 | 483.3.082.1B | 033 | 7 |
| 349.1.209.1A | 021a | 3 | 389.4.022.1A | 018a | 5 | 438.1.365.1AA | 032 | 14 | 460.1.387.1A | 034 | 8 | 484.1.077.1A | 029 | 5 |
| 349.1.223.1A | 021a | 18 | 389.4.023.1A | 018 | 19 | 438.1.365.1AT | 032 | 14 | 460.1.405.1A | 019 | 48 | 484.1.078.1A | 029 | 23 |
| 349.1.224.1A | 021a | 20 | 389.4.024.1A | 018a | 5 | 438.1.454.1A | 026 | 20 | 460.2.359.1A | 019 | 36 | 484.2.075.1A | 029 | 3 |
| 349.1.225.1A | 021a | 9 | 390.4.016.1A | 027a | 14 | 438.1.455.1A | 026 | 20 | 462.4.046.1A | 019 | 39 | 484.2.076.1A | 029 | 21 |
| 349.1.226.1A | 021a | 11 | 390.4.021.1A | 020 | 10 | 442.1.139.3B | 029 | 7 | 463.2.022.2A | 010 | 12 | 486.1.081.1A | 032 | 15 |
| 349.1.227.1A | 021a | 12 | 390.4.021.1A | 027a | 4 | 442.1.184.1A | 029 | 15 | 463.2.053.7A | 003 | 14 | 486.1.082.1A | 005 | 23 |
| 349.1.228.1A | 021a | 7 | 390.4.024.1A | 020 | 22 | 444.4.003.4A | 009 | 20 | 463.2.053.7A | 004 | 15 | 492.1.004.1A | 026a | 19 |




CATALOGUE No: 915.1.289.1B
ISSUED: 04 - 09

Index


| CODE No. | Drwg. | POS. N. | CODE No. | Drwg. | POS. N. | CODE No. | Drwg. | POS. N. | CODE No. | Drwg. | POS. N. | CODE No. | Drwg. | POS. N. |
|---|---|---|---|---|---|---|---|---|---|---|---|---|---|---|
| 492.4.089.1A | 026 | 12 | 530.1.022.4A | 027a | 3 | 553.4.004.1A | 031 | 19 | 590.1.360.1A | 032a | 8 | 626.4.056.1A | 023 | 18 |
| 492.4.090.1A | 026 | 5 | 530.1.023.4A | 020 | 24 | 556.1.046.2AB | 022a | 3 | 590.2.026.1A | 017 | 20 | 626.4.056.1A | 024 | 7 |
| 494.1.132.1A | 026a | 10 | 530.1.023.4A | 027a | 21 | 556.2.045.1A | 022a | 1 | 593.1.018.1A | 009 | 5 | 626.4.066.1A | 023 | 19 |
| 497.2.001.2A | 026 | 3 | 539.1.021.1B | 002 | 6 | 561.1.027.1A | 027a | 8 | 593.2.042.1A | 010 | 11 | 626.4.067.1A | 024 | 24 |
| 497.2.003.1A | 026 | 16 | 539.1.023.3A | 022a | 5 | 564.2.062.1AA | 034 | 3 | 593.4.030.1A | 018 | 10 | 630.4.048.1A | 023 | 1 |
| 501.2.127.1AC | 026 | 10 | 539.4.003.1B | 025 | 5 | 564.2.062.1AW | 034 | 3 | 595.1.100.1A | 033 | 1 | 631.4.008.1A | 023 | 22 |
| 502.2.127.2AC | 026 | 7 | 539.4.030.2A | 005 | 9 | 565.1.044.1B | 028a | 21 | 595.1.101.1A | 033 | 16 | 631.4.008.1A | 024 | 6 |
| 510.1.570.1A | 018a | 21 | 539.4.035.1A | 024 | 5 | 570.1.259.1A | 019 | 11 | 598.1.013.1A | 033 | 20 | 631.4.016.1A | 025 | 25 |
| 510.1.662.1B | 018a | 2 | 539.4.036.1A | 023 | 21 | 570.1.274.1B | 019 | 24 | 598.2.061.1A | 033 | 22 | 631.4.028.1A | 023 | 20 |
| 510.1.694.1B | 018a | 1 | 540.4.019.1A | 018 | 3 | 571.1.260.2A | 019 | 14 | 598.2.064.1C | 032 | 16 | 631.4.028.1A | 024 | 31 |
| 514.1.032.1A | 001d | 9 | 541.4.010.1A | 018a | 3 | 573.1.116.1A | 019 | 28 | 598.4.028.1A | 021 | 39 | 631.4.033.1A | 024 | 2 |
| 514.1.033.1A | 001d | 13 | 547.1.001.1A | 016 | 6 | 585.1.064.1A | 031 | 1 | 598.4.029.1A | 021 | 18 | 631.4.034.1A | 023 | 2 |
| 514.1.035.1A | 001d | 10 | 548.4.083.1A | 030 | 1 | 585.4.001.1A | 025 | 26 | 610.4.090.1C | 024 | 9 | 632.1.049.1B | 023 | 6 |
| 514.1.036.1A | 001d | 10 | 548.4.084.1A | 030 | 2 | 585.4.010.1A | 023 | 12 | 610.4.091.1C | 024 | 26 | 650.1.009.1D | 021 | 25 |
| 514.1.037.1A | 001d | 6 | 549.1.090.1A | 016 | 3 | 585.4.011.1A | 024 | 15 | 611.4.029.1A | 025 | 29 | 651.1.011.1C | 021 | 14 |
| 514.1.038.1A | 001d | 14 | 549.1.091.1A | 016 | 4 | 586.1.172.1AA | 032 | 1 | 612.4.005.1A | 023 | 4 | 652.4.014.1B | 021 | 30 |
| 514.1.062.1A | 018 | 15 | 550.4.020.1A | 030 | 4 | 586.1.172.1AW | 032 | 1 | 612.4.005.1A | 024 | 21 | 654.2.016.1A | 021 | 20 |
| 514.1.063.1A | 018 | 22 | 552.1.037.1A | 001d | 4 | 587.1.051.2A | 032 | 2 | 612.4.008.1A | 025 | 31 | 656.2.092.1A | 021 | 26 |
| 516.4.004.2B | 018a | 20 | 552.1.038.1A | 001d | 5 | 587.1.052.2A | 032 | 3 | 612.4.016.1A | 025 | 14 | 668.1.001.4A | 007 | 14 |
| 518.4.005.1B | 021 | 37 | 552.1.039.1A | 001d | 19 | 590.1.189.1A | 001d | 1 | 612.4.037.1A | 024 | 30 | 668.1.001.4A | 011 | 16 |
| 520.1.018.1A | 020 | 12 | 552.1.040.1A | 001d | 11 | 590.1.190.1A | 001d | 2 | 613.4.038.1A | 025 | 30 | 668.4.001.1A | 031 | 21 |
| 523.4.022.2A | 021 | 8 | 552.1.111.1A | 019 | 12 | 590.1.245.1A | 035 | 2 | 613.4.090.1A | 024 | 8 | 669.1.001.1E | 014 | 6 |
| 523.4.023.2A | 021 | 9 | 552.4.012.1A | 020 | 29 | 590.1.307.1B | 035 | 4 | 618.4.075.1B | 024 | 20 | 669.1.001.1E | 015 | 6 |
| 525.1.037.1A | 027a | 22 | 552.4.013.1A | 031 | 9 | 590.1.348.1A | 035 | 9 | 618.4.095.1B | 024 | 19 | 670.4.038.1A | 018a | 12 |
| 529.1.001.2A | 021a | 27 | 552.4.037.3E | 025 | 34 | 590.1.349.1A | 035 | 10 | 619.4.042.1B | 025 | 28 | 676.2.074.1A | 026a | 1 |
| 529.1.010.1A | 027a | 9 | 552.4.048.1A | 032a | 9 | 590.1.350.1A | 035 | 6 | 624.4.057.1A | 024 | 1 | 676.4.074.1A | 026a | 8 |
| 530.1.022.4A | 020 | 9 | 552.4.132.1A | 010 | 31 | 590.1.351.1A | 035 | 15 | 625.4.018.1B | 025 | 16 | 680.1.001.1B | 009 | 24 |




CATALOGUE No: 915.1.289.1B
ISSUED: 04 - 09

Index


| CODE No. | Drwg. | POS. N. | CODE No. | Drwg. | POS. N. | CODE No. | Drwg. | POS. N. | CODE No. | Drwg. | POS. N. | CODE No. | Drwg. | POS. N. |
|---|---|---|---|---|---|---|---|---|---|---|---|---|---|---|
| 680.1.013.1A | 006 | 10 | 702.5.008.1A | 010 | 6 | 713.1.014.1E | 003 | 11 | 716.1.003.1A | 034 | 21 | 73503.3380 | 011 | 17 |
| 680.1.013.1A | 008 | 12 | 702.5.008.1A | 011 | 4 | 713.1.128.1B | 011 | 27 | 716.1.043.1C | 035 | 19 | 73503.3804 | 008 | 26 |
| 680.5.006.1A | 013 | 12 | 702.5.019.1A | 010a | 1 | 713.1.140.1A | 010a | 4 | 716.1.072.2A | 008 | 20 | 736.4.013.1B | 034 | 6 |
| 684.1.073.1A | 030 | 17 | 702.5.044.1A | 003 | 29 | 713.1.187.1A | 028a | 11 | 716.1.128.1A | 008 | 17 | 737.4.025.1A | 008 | 5 |
| 696.1.012.1A | 027 | 15 | 702.5.045.1A | 026 | 8 | 713.1.192.1A | 025 | 33 | 716.1.143.1A | 029 | 18 | 741.1.040.1A | 018a | 7 |
| 697.2.025.2A | 033 | 15 | 702.5.045.1A | 028a | 10 | 713.1.196.1A | 026 | 17 | 716.1.144.1A | 019 | 22 | 741.1.047.1A | 019 | 30 |
| 698.1.033.1A | 001d | 15 | 702.5.051.1A | 004 | 18 | 713.1.197.3A | 026 | 2 | 716.1.154.1A | 027a | 1 | 741.1.048.1A | 019 | 44 |
| 699.2.345.1A | 032a | 12 | 702.5.053.1A | 004 | 14 | 713.1.210.1A | 021 | 41 | 716.1.155.1A | 027a | 2 | 741.4.013.1B | 031 | 7 |
| 700.1.036.1A | 012 | 19 | 703.1.013.1A | 021 | 12 | 713.1.239.1A | 028 | 2 | 716.1.401.1A | 018 | 25 | 741.4.038.1A | 018a | 15 |
| 700.1.048.1B | 020 | 13 | 703.5.002.2A | 013 | 2 | 713.1.266.1A | 003 | 15 | 716.1.401.1A | 028a | 22 | 741.4.038.1A | 025 | 7 |
| 700.1.054.1A | 021 | 10 | 703.5.006.2A | 008 | 21 | 713.1.292.1A | 014 | 9 | 716.1.401.1B | 034 | 2 | 741.4.043.1A | 023 | 14 |
| 700.1.063.1A | 021 | 46 | 70610.8120 | 004 | 11 | 713.1.292.1A | 015 | 9 | 716.1.407.1A | 018 | 5 | 741.4.043.1A | 024 | 16 |
| 700.9.056.2A | 026a | 9 | 710.1.061.1A | 006 | 7 | 713.1.330.1A | 032 | 11 | 716.1.407.1A | 019 | 7 | 741.4.043.1A | 025 | 17 |
| 701.4.004.1A | 028 | 7 | 710.1.109.1A | 028a | 4 | 713.1.364.1A | 024 | 32 | 716.1.407.1A | 029 | 25 | 741.4.043.1A | 035 | 11 |
| 701.4.005.1A | 003 | 4 | 710.1.124.2A | 004 | 23 | 713.1.393.1A | 003 | 13 | 716.1.412.1A | 019 | 43 | 741.4.057.1A | 035 | 3 |
| 701.4.017.1A | 028a | 6 | 710.1.125.1A | 010 | 28 | 713.1.393.1A | 004 | 31 | 716.1.412.1A | 021 | 43 | 741.4.058.1A | 035 | 7 |
| 701.4.023.1A | 012 | 11 | 710.1.126.1A | 010a | 21 | 713.1.409.1A | 008 | 24 | 716.1.414.1A | 019 | 18 | 741.4.063.1A | 029 | 12 |
| 702.4.004.1A | 021 | 6 | 710.1.132.1A | 028 | 11 | 713.1.436.1A | 019 | 34 | 716.1.418.1A | 027a | 24 | 741.4.063.1A | 035 | 5 |
| 702.4.009.1A | 011 | 11 | 711.1.089.1A | 006 | 6 | 713.1.458.1A | 020 | 32 | 716.1.419.1A | 030 | 8 | 741.4.130.1A | 031 | 25 |
| 702.4.010.2A | 011 | 9 | 711.1.095.1A | 010a | 7 | 713.1.459.1A | 020 | 33 | 72094.1616 | 010 | 17 | 741.4.153.1A | 031 | 6 |
| 702.4.013.1A | 010 | 19 | 711.1.160.1A | 005 | 13 | 713.1.470.1A | 027a | 5 | 732.1.017.1A | 033 | 36 | 741.4.156.1A | 031 | 23 |
| 702.4.017.1A | 004 | 20 | 711.1.160.1A | 011 | 14 | 713.1.915.1A | 002 | 29 | 732.2.027.1A | 019 | 20 | 741.4.165.1A | 029 | 22 |
| 702.4.018.1A | 012 | 15 | 711.1.219.1A | 007 | 12 | 714.1.074.1A | 026 | 15 | 73500.1440 | 012 | 20 | 741.4.186.1A | 029 | 20 |
| 702.4.020.1A | 010a | 11 | 712.1.029.1A | 028a | 9 | 714.1.075.1A | 026a | 12 | 73500.1542 | 002 | 15 | 741.4.189.1A | 017 | 21 |
| 702.4.033.1A | 010 | 21 | 712.1.030.1A | 028a | 12 | 714.1.094.1A | 026 | 9 | 73500.2054 | 008 | 27 | 741.4.190.1A | 030 | 14 |
| 702.4.033.1A | 010a | 2 | 712.1.034.1A | 022 | 17 | 715.1.003.1A | 028 | 5 | 73503.3380 | 010 | 9 | 741.4.190.1A | 031 | 5 |
| 702.4.058.1A | 008 | 10 | 712.1.034.1A | 025 | 10 | 716.1.003.1A | 016 | 10 | 73503.3380 | 010a | 10 | 741.4.192.1A | 007 | 7 |


CATALOGUE No: 915.1.289.1B
ISSUED: 04 - 09

CATALOGUE No: 915.1.289.1B
ISSUED: 04 - 09

Index


| CODE No. | Drwg. | POS. N. | CODE No. | Drwg. | POS. N. | CODE No. | Drwg. | POS. N. | CODE No. | Drwg. | POS. N. | CODE No. | Drwg. | POS. N. |
|---|---|---|---|---|---|---|---|---|---|---|---|---|---|---|
| 741.4.192.1A | 031 | 24 | 750.1.007.1A | 003 | 32 | 764.1.022.1A | 034 | 20 | 771.1.044.1A | 032a | 7 | 771.5.069.8B | 011 | 19 |
| 741.4.193.1A | 018a | 13 | 750.1.012.2A | 006 | 14 | 764.1.024.1A | 030 | 22 | 771.1.046.1A | 021 | 44 | 771.5.069.8B | 012 | 7 |
| 741.4.198.1A | 031 | 30 | 750.1.021.1A | 028 | 12 | 764.1.029.1A | 035 | 18 | 771.1.049.1A | 008 | 6 | 771.5.071.8B | 011 | 15 |
| 74224.0570 | 004 | 24 | 750.1.022.1A | 028 | 15 | 764.1.050.1A | 022 | 26 | 771.1.049.1A | 012 | 5 | 771.5.072.8B | 010a | 14 |
| 747.5.001.1AB | 022 | 29 | 750.1.048.1A | 022a | 10 | 764.1.051.1A | 022 | 25 | 771.1.051.8B | 011 | 36 | 771.5.078.8B | 005 | 3 |
| 747.5.003.1A | 021 | 1 | 750.1.057.1A | 006 | 13 | 764.1.054.1A | 033 | 25 | 771.1.052.1A | 005 | 2 | 771.5.078.8B | 012 | 12 |
| 747.5.003.1A | 025 | 15 | 750.1.121.1A | 012 | 3 | 764.1.064.1A | 019 | 19 | 771.1.052.1A | 012 | 6 | 771.5.079.8B | 005 | 11 |
| 747.5.010.1A | 022 | 23 | 750.1.140.1A | 026 | 13 | 764.1.064.1A | 020 | 1 | 771.1.226.1A | 029 | 19 | 771.5.080.8B | 010a | 15 |
| 748.1.024.1A | 019 | 3 | 750.1.140.1A | 026a | 2 | 764.1.087.1A | 014 | 8 | 771.1.233.1A | 017 | 6 | 771.5.125.0Z | 002 | 30 |
| 748.1.035.1B | 019 | 25 | 750.1.155.1A | 033 | 14 | 764.1.087.1A | 015 | 8 | 771.1.369.1A | 018 | 12 | 771.5.129.8B | 009 | 8 |
| 748.1.036.1A | 019 | 1 | 750.5.001.1B | 018 | 2 | 764.1.090.1A | 027a | 18 | 771.1.369.1A | 027 | 5 | 771.5.136.8B | 010a | 22 |
| 748.1.040.1A | 002 | 23 | 750.5.001.1B | 020 | 14 | 764.1.090.1A | 029 | 17 | 771.1.373.1A | 021 | 19 | 771.5.139.8B | 010 | 10 |
| 748.1.046.1A | 026a | 4 | 75191.3380 | 010 | 4 | 764.1.097.1A | 020 | 30 | 771.1.374.1A | 021 | 17 | 771.5.139.8B | 010a | 17 |
| 748.1.050.1A | 010 | 14 | 756.2.007.1A | 026a | 13 | 764.1.105.1A | 019 | 42 | 771.1.375.1A | 005 | 8 | 771.5.639.8B | 018 | 4 |
| 748.1.065.1A | 026 | 1 | 75794.1542 | 010a | 9 | 76402.0002 | 003 | 17 | 771.5.043.8B | 004 | 4 | 771.5.639.8B | 019 | 45 |
| 748.1.066.2A | 004 | 25 | 758.1.036.1A | 029 | 8 | 766.1.055.2B | 010 | 16 | 771.5.064.8B | 011 | 5 | 771.5.639.8B | 027a | 29 |
| 748.4.002.1A | 022 | 2 | 758.1.039.2A | 017 | 18 | 766.4.019.1A | 014 | 21 | 771.5.064.8B | 030 | 12 | 771.5.640.8B | 019 | 21 |
| 748.4.024.1AB | 021 | 11 | 758.4.017.1A | 017 | 3 | 766.4.019.1A | 015 | 21 | 771.5.064.8B | 035 | 20 | 771.5.640.8B | 032 | 9 |
| 748.4.037.1AB | 028 | 3 | 759.1.022.2A | 026 | 19 | 76835.1134 | 002 | 10 | 771.5.065.2BB | 004 | 28 | 771.5.651.8B | 020 | 7 |
| 749.1.002.1A | 035 | 21 | 759.1.022.2A | 026a | 20 | 770.5.250.8B | 010a | 5 | 771.5.065.8B | 010 | 2 | 771.5.662.8B | 018 | 21 |
| 749.4.002.1A | 021 | 32 | 764.1.001.1A | 019 | 33 | 770.5.250.8B | 011 | 6 | 771.5.065.8B | 017 | 2 | 771.5.663.8B | 016 | 9 |
| 749.4.004.1A | 022 | 21 | 764.1.001.1A | 032 | 10 | 771.1.031.1A | 028 | 1 | 771.5.066.8B | 011 | 20 | 771.5.663.8B | 019 | 47 |
| 749.4.008.1A | 008 | 7 | 764.1.003.1B | 004 | 6 | 771.1.039.1A | 020 | 5 | 771.5.066.8B | 018a | 9 | 771.5.663.8B | 020 | 11 |
| 749.4.031.1A | 019 | 15 | 764.1.011.2A | 022 | 18 | 771.1.039.1A | 021 | 28 | 771.5.067.0Z | 002 | 28 | 771.5.665.8B | 025 | 35 |
| 749.4.031.1A | 033 | 24 | 764.1.011.2A | 025 | 12 | 771.1.039.1A | 026a | 11 | 771.5.067.8B | 011 | 3 | 771.5.667.8B | 022 | 14 |
| 749.4.112.8B | 019 | 31 | 764.1.022.1A | 016 | 11 | 771.1.043.1A | 022a | 2 | 771.5.069.8B | 005 | 5 | 771.5.668.8B | 018 | 8 |
| 749.4.112.8B | 027 | 3 | 764.1.022.1A | 030 | 6 | 771.1.043.1A | 025 | 2 | 771.5.069.8B | 009 | 10 | 771.5.672.8B | 018 | 14 |


CATALOGUE No: 915.1.289.1B
ISSUED: 04 - 09

CATALOGUE No: 915.1.289.1B
ISSUED: 04 - 09

Index


| CODE No. | Drwg. | POS. N. | CODE No. | Drwg. | POS. N. | CODE No. | Drwg. | POS. N. | CODE No. | Drwg. | POS. N. | CODE No. | Drwg. | POS. N. |
|---|---|---|---|---|---|---|---|---|---|---|---|---|---|---|
| 771.5.721.3B | 027 | 12 | 772.1.086.1B | 033 | 13 | 774.4.006.1A | 027a | 28 | 779.1.092.1A | 023 | 7 | 779.1.509.2A | 013 | 3 |
| 771.5.723.8B | 025 | 32 | 772.1.087.3AB | 027 | 2 | 774.4.010.1A | 034 | 25 | 779.1.092.1A | 024 | 13 | 779.1.547.1A | 006 | 4 |
| 771.5.725.8B | 019 | 29 | 772.1.088.2B | 028a | 24 | 775.1.017.1C | 017 | 12 | 779.1.109.2A | 006 | 2 | 779.1.591.1A | 021 | 38 |
| 771.5.725.8B | 021 | 7 | 772.1.089.3B | 016 | 8 | 775.1.019.1A | 028a | 13 | 779.1.162.2A | 009 | 13 | 779.1.605.1A | 034 | 14 |
| 771.5.727.8B | 021 | 13 | 772.1.089.3B | 019 | 8 | 775.1.031.1B | 010 | 25 | 779.1.187.1A | 008 | 23 | 779.1.618.1A | 034 | 17 |
| 771.5.727.8B | 021a | 5 | 772.1.089.3B | 034 | 1 | 775.1.031.1B | 010a | 20 | 779.1.202.1B | 030 | 3 | 779.4.005.2A | 022a | 4 |
| 771.5.728.8B | 032 | 13 | 772.1.101.1B | 027a | 12 | 775.1.033.1A | 020 | 17 | 779.1.203.3A | 002 | 7 | 779.4.075.1A | 011 | 2 |
| 771.5.938.8B | 028 | 9 | 772.1.102.1A | 034 | 12 | 775.1.045.1A | 027a | 23 | 779.1.237.1B | 025 | 8 | 779.5.030.2A | 013 | 16 |
| 771.5.940.8B | 021 | 34 | 772.1.109.1A | 029 | 1 | 775.1.051.1A | 032a | 3 | 779.1.298.1A | 021 | 2 | 780.1.007.1A | 019 | 9 |
| 772.1.042.2A | 029 | 6 | 772.1.109.1A | 033 | 26 | 775.1.051.1B | 022 | 6 | 779.1.309.1AB | 024 | 28 | 780.1.018.1A | 009 | 2 |
| 772.1.046.1B | 018 | 16 | 772.1.109.1A | 034 | 23 | 775.1.051.1B | 032 | 7 | 779.1.331.1D | 024 | 25 | 780.1.051.1A | 014 | 12 |
| 772.1.047.1B | 030 | 15 | 772.1.110.1A | 017 | 14 | 775.1.054.1A | 024 | 29 | 779.1.366.1AB | 023 | 16 | 780.1.051.1A | 015 | 12 |
| 772.1.050.1C | 018a | 19 | 772.4.046.3C | 030 | 9 | 775.1.054.1A | 030 | 7 | 779.1.366.1AB | 024 | 23 | 780.1.072.1A | 010a | 6 |
| 772.1.050.1C | 032 | 4 | 772.4.046.3C | 034 | 22 | 775.5.001.3C | 020 | 25 | 779.1.366.1AB | 025 | 22 | 780.5.001.1A | 005 | 15 |
| 772.1.059.1A | 030 | 16 | 772.5.034.1A | 008 | 30 | 775.5.013.1A | 027a | 7 | 779.1.399.1A | 026 | 4 | 780.5.001.1A | 011 | 33 |
| 772.1.059.1A | 031 | 3 | 772.5.038.1AB | 019 | 17 | 775.5.016.1A | 019 | 40 | 779.1.404.1A | 006 | 9 | 786.1.092.2A | 007 | 11 |
| 772.1.060.1A | 009 | 16 | 772.5.101.8B | 027a | 15 | 775.5.021.1A | 010 | 29 | 779.1.415.1A | 024 | 3 | 786.1.094.1A | 007 | 13 |
| 772.1.061.1A | 020 | 6 | 773.1.002.1A | 021 | 47 | 775.5.021.1A | 035 | 14 | 779.1.421.1A | 014 | 23 | 787.1.011.1A | 016 | 1 |
| 772.1.061.1A | 030 | 21 | 773.1.005.1A | 017 | 19 | 775.5.024.1A | 019 | 27 | 779.1.421.1A | 015 | 23 | 788.1.054.2A | 012 | 4 |
| 772.1.062.1A | 031 | 15 | 773.1.005.1A | 029 | 9 | 775.5.025.1A | 034 | 26 | 779.1.440.1B | 028a | 16 | 788.1.083.1A | 019 | 32 |
| 772.1.063.1A | 025 | 19 | 773.5.039.3B | 027a | 19 | 777.5.049.8B | 011 | 24 | 779.1.484.2B | 022 | 24 | 788.1.093.1A | 013 | 9 |
| 772.1.077.2AB | 022 | 7 | 773.5.061.8B | 010a | 13 | 778.5.016.1A | 009 | 26 | 779.1.488.1A | 026a | 21 | 788.1.094.1A | 013 | 8 |
| 772.1.078.2A | 028a | 3 | 773.5.062.3B | 023 | 10 | 778.5.016.1A | 010 | 33 | 779.1.498.1A | 033 | 21 | 788.1.096.2A | 017 | 9 |
| 772.1.084.2A | 033 | 5 | 773.5.062.3B | 024 | 10 | 778.5.016.1A | 010a | 12 | 779.1.499.2A | 033 | 27 | 788.1.097.2A | 017 | 10 |
| 772.1.085.2A | 017 | 8 | 773.5.062.8B | 025 | 24 | 779.1.026.2A | 011 | 10 | 779.1.501.1A | 005 | 24 | 788.1.098.1A | 029 | 4 |
| 772.1.085.3B | 033 | 6 | 773.5.506.8B | 019 | 35 | 779.1.039.1A | 002 | 3 | 779.1.503.1A | 028a | 18 | 788.1.106.2A | 005 | 14 |
| 772.1.085.3B | 034 | 19 | 774.4.004.1A | 020 | 19 | 779.1.082.1AB | 023 | 5 | 779.1.504.1A | 028 | 4 | 790.1.015.1A | 019 | 4 |


CATALOGUE No: 915.1.289.1B
ISSUED: 04 - 09

CATALOGUE No: 915.1.289.1B
ISSUED: 04 - 09

Index


| CODE No. | Drwg. | POS. N. | CODE No. | Drwg. | POS. N. | CODE No. | Drwg. | POS. N. | CODE No. | Drwg. | POS. N. | CODE No. | Drwg. | POS. N. |
|---|---|---|---|---|---|---|---|---|---|---|---|---|---|---|
| 791.1.067.1A | 029 | 16 | 800.1.176.1A | 031 | 26 | 821.1.170.1A | 022 | 13 | 829.1.978.1A | 023 | 9 | 830.1.564.1A | 033 | 23 |
| 791.2.044.1A | 007 | 6 | 800.1.177.1A | 031 | 22 | 821.1.170.1A | 025 | 9 | 829.1.979.1A | 024 | 11 | 832.1.003.1C | 028a | 14 |
| 799.1.024.1A | 027 | 10 | 8000.53724 | 018a | 16 | 821.1.222.1B | 014 | 17 | 829.1.980.1A | 027a | 16 | 840.1.001.1A | 14/15 | 1 |
| 799.1.049.1A | 002 | 1 | 8000.56443 | 023 | 13 | 821.1.222.1B | 015 | 17 | 829.1.981.1A | 027a | 6 | 840.1.002.1A | 14/15 | 1 |
| 799.1.051.2A | 006 | 3 | 8000.56443 | 024 | 18 | 821.1.223.1B | 014 | 15 | 829.1.982.1A | 020 | 15 | 840.1.003.1A | 14/15 | 1 |
| 799.1.055.1A | 009 | 3 | 8000.70139 | 001b | 8 | 821.1.223.1B | 015 | 15 | 829.1.983.1A | 020 | 23 | 840.1.004.1A | 14/15 | 1 |
| 799.1.158.1A | 022a | 6 | 808.1.118.1A | 021 | 42 | 821.1.268.1A | 002 | 13 | 829.1.984.1A | 025 | 1 | 840.1.005.1A | 14/15 | 1 |
| 799.1.166.1A | 022 | 3 | 814.1.111.3B | 035 | 12 | 821.1.273.1A | 025 | 13 | 829.1.985.2A | 018 | 6 | 840.1.006.1A | 14/15 | 1 |
| 799.1.175.1A | 033 | 33 | 814.1.114.1A | 001d | 8 | 821.1.309.3A | 012 | 8 | 829.2.766.1A | 030 | 10 | 840.1.007.1A | 14/15 | 1 |
| 799.1.253.1A | 004 | 1 | 814.1.179.1A | 032a | 2 | 824.1.154.1A | 022 | 28 | 830.1.235.1A | 011 | 35 | 840.1.008.1A | 14/15 | 1 |
| 799.1.256.1A | 025 | 4 | 814.1.183.1A | 035 | 8 | 824.1.155.1A | 022 | 9 | 830.1.411.1A | 020 | 28 | 840.1.009.1A | 14/15 | 1 |
| 799.1.263.2A | 019 | 13 | 814.1.188.1A | 015 | 25 | 824.1.156.1A | 027 | 8 | 830.1.416.1A | 020 | 2 | 840.1.010.1A | 14/15 | 1 |
| 799.1.482.1A | 002 | 20 | 814.1.236.1C | 031 | 11 | 824.1.157.1A | 027 | 9 | 830.1.441.1A | 031 | 4 | 840.1.011.1A | 14/15 | 1 |
| 799.1.485.1A | 014 | 19 | 814.1.311.1A | 029 | 13 | 825.1.036.2A | 026a | 17 | 830.1.465.1A | 035 | 16 | 840.1.012.1A | 14/15 | 1 |
| 799.1.485.1A | 015 | 19 | 814.1.326.1A | 031 | 14 | 826.1.012.1A | 010 | 18 | 830.1.479.1A | 024 | 27 | 840.1.013.1A | 14/15 | 1 |
| 799.1.486.1A | 014 | 18 | 814.1.327.1A | 031 | 27 | 826.1.030.1A | 002 | 33 | 830.1.494.1B | 008 | 28 | 840.1.014.1A | 14/15 | 1 |
| 799.1.486.1A | 015 | 18 | 814.4.010.1A | 032a | 10 | 827.1.157.1A | 035 | 17 | 830.1.494.1B | 034 | 24 | 840.1.015.1A | 14/15 | 1 |
| 799.2.077.2A | 009 | 14 | 815.1.022.1A | 016 | 2 | 827.1.433.1A | 005 | 25 | 830.1.527.1A | 021 | 33 | 840.1.016.1A | 14/15 | 1 |
| 799.2.159.1A | 022a | 7 | 815.1.028.1A | 009 | 21 | 827.1.482.1A | 033 | 18 | 830.1.530.1A | 016 | 7 | 840.1.017.1A | 14/15 | 1 |
| 799.4.009.1A | 019 | 23 | 818.2.009.1A | 004 | 3 | 827.1.493.1A | 020 | 8 | 830.1.543.1A | 027 | 4 | 840.1.018.1A | 14/15 | 1 |
| 800.1.169.1A | 031 | 18 | 819.1.060.1A | 026 | 11 | 827.1.530.1A | 034 | 15 | 830.1.544.1A | 018 | 7 | 840.1.019.1A | 14/15 | 1 |
| 800.1.170.2A | 030 | 13 | 819.2.063.2A | 026a | 6 | 827.1.531.1A | 034 | 13 | 830.1.548.1A | 027a | 27 | 840.1.020.1A | 14/15 | 1 |
| 800.1.171.1A | 031 | 13 | 821.1.001.1A | 002 | 26 | 827.1.538.1A | 020 | 31 | 830.1.549.1A | 018 | 17 | 840.1.021.1A | 14/15 | 1 |
| 800.1.172.1A | 031 | 16 | 821.1.051.1AB | 022 | 4 | 827.1.543.1A | 017 | 4 | 830.1.550.1A | 018 | 26 | 840.1.022.1A | 14/15 | 1 |
| 800.1.173.1A | 031 | 17 | 821.1.051.1AB | 027 | 7 | 827.1.544.1A | 020 | 3 | 830.1.554.1A | 032a | 5 | 840.1.023.1A | 14/15 | 1 |
| 800.1.174.2A | 007 | 8 | 821.1.070.1A | 002 | 17 | 829.1.260.2A | 022a | 8 | 830.1.555.1A | 032a | 4 | 840.1.024.1A | 14/15 | 1 |
| 800.1.175.2A | 007 | 9 | 821.1.103.2A | 022a | 9 | 829.1.974.1A | 020 | 16 | 830.1.556.1A | 018 | 27 | 840.1.025.1A | 14/15 | 1 |




CATALOGUE No: 915.1.289.1B
ISSUED: 04 - 09

Index


| CODE No. | Drwg. | POS. N. | CODE No. | Drwg. | POS. N. | CODE No. | Drwg. | POS. N. | CODE No. | Drwg. | POS. N. | CODE No. | Drwg. | POS. N. |
|---|---|---|---|---|---|---|---|---|---|---|---|---|---|---|
| 840.1.026.1A | 14/15 | 1 | 840.1.059.2B | 14/15 | 2 | 840.1.086.2B | 14/15 | 2 | 850.4.055.1A | 033 | 28 | 852.1.104.2I | 006 | 11 |
| 840.1.027.1A | 14/15 | 1 | 840.1.060.2B | 14/15 | 2 | 840.1.087.2B | 14/15 | 2 | 850.4.067.1A | 018a | 14 | 852.1.104.2J | 006 | 11 |
| 840.1.028.1A | 14/15 | 1 | 840.1.061.2B | 14/15 | 2 | 840.2.001.1A | 014 | 1 | 851.1.001.1B | 004 | 9 | 852.1.114.1A | 011 | 34 |
| 840.1.029.1A | 14/15 | 1 | 840.1.062.2B | 14/15 | 2 | 840.2.001.1A | 015 | 1 | 851.1.004.1A | 003 | 31 | 852.1.119.1A | 034 | 11 |
| 840.1.030.1A | 14/15 | 1 | 840.1.063.2B | 14/15 | 2 | 840.2.002.2B | 014 | 2 | 851.1.010.1A | 006 | 12 | 852.1.135.1A | 005 | 19 |
| 840.1.031.1A | 14/15 | 1 | 840.1.064.2B | 14/15 | 2 | 840.2.002.2B | 015 | 2 | 851.1.013.1A | 008 | 14 | 852.1.144.1A | 028a | 23 |
| 840.1.032.1A | 14/15 | 1 | 840.1.065.2B | 14/15 | 2 | 841.1.037.1A | 033 | 34 | 851.4.002.1A | 004 | 5 | 852.1.151.1A | 022 | 15 |
| 840.1.033.1A | 14/15 | 1 | 840.1.066.2B | 14/15 | 2 | 841.1.050.1A | 028a | 19 | 851.4.006.1A | 021 | 22 | 852.1.151.1A | 025 | 3 |
| 840.1.034.1A | 14/15 | 1 | 840.1.067.2B | 14/15 | 2 | 841.1.051.1B | 004 | 2 | 852.1.005.1A | 002 | 14 | 852.1.160.1B | 018 | 11 |
| 840.1.041.2B | 14/15 | 2 | 840.1.068.2B | 14/15 | 2 | 847.4.002.1A | 027 | 11 | 852.1.049.1B | 021 | 35 | 852.1.172.1A | 009 | 11 |
| 840.1.042.2B | 14/15 | 2 | 840.1.069.2B | 14/15 | 2 | 848.2.002.1A | 021 | 4 | 852.1.053.2A | 002 | 2 | 852.1.172.1A | 011 | 7 |
| 840.1.043.2B | 14/15 | 2 | 840.1.070.2B | 14/15 | 2 | 848.4.026.1A | 028 | 13 | 852.1.072.1A | 019 | 6 | 852.1.174.1A | 008 | 8 |
| 840.1.044.2B | 14/15 | 2 | 840.1.071.2B | 14/15 | 2 | 848.4.027.1A | 028 | 16 | 852.1.075.1B | 034 | 4 | 852.1.174.1A | 009 | 9 |
| 840.1.045.2B | 14/15 | 2 | 840.1.072.2B | 14/15 | 2 | 848.5.001.1A | 022 | 16 | 852.1.094.1A | 002 | 19 | 852.1.176.1A | 016 | 13 |
| 840.1.046.2B | 14/15 | 2 | 840.1.073.2B | 14/15 | 2 | 848.5.002.1A | 022 | 22 | 852.1.099.1A | 032 | 12 | 852.1.176.1A | 018a | 10 |
| 840.1.047.2B | 14/15 | 2 | 840.1.074.2B | 14/15 | 2 | 850.1.209.1A | 034 | 5 | 852.1.104.1H | 006 | 11 | 852.1.176.1A | 020 | 4 |
| 840.1.048.2B | 14/15 | 2 | 840.1.075.2B | 14/15 | 2 | 850.4.038.1A | 019 | 46 | 852.1.104.1K | 006 | 11 | 852.1.176.1A | 031 | 29 |
| 840.1.049.2B | 14/15 | 2 | 840.1.076.2B | 14/15 | 2 | 850.4.038.1A | 030 | 18 | 852.1.104.1L | 006 | 11 | 852.1.186.1A | 019 | 16 |
| 840.1.050.2B | 14/15 | 2 | 840.1.077.2B | 14/15 | 2 | 850.4.038.1A | 033 | 11 | 852.1.104.1M | 006 | 11 | 852.1.195.1A | 005 | 10 |
| 840.1.051.2B | 14/15 | 2 | 840.1.078.2B | 14/15 | 2 | 850.4.043.1A | 017 | 5 | 852.1.104.1N | 006 | 11 | 852.1.195.1A | 009 | 7 |
| 840.1.052.2B | 14/15 | 2 | 840.1.079.2B | 14/15 | 2 | 850.4.047.1A | 020 | 18 | 852.1.104.2A | 006 | 11 | 852.1.216.1A | 028a | 2 |
| 840.1.053.2B | 14/15 | 2 | 840.1.080.2B | 14/15 | 2 | 850.4.047.1A | 027a | 17 | 852.1.104.2B | 006 | 11 | 852.1.217.1A | 026a | 15 |
| 840.1.054.2B | 14/15 | 2 | 840.1.081.2B | 14/15 | 2 | 850.4.047.1A | 033 | 4 | 852.1.104.2C | 006 | 11 | 852.1.221.1A | 026 | 14 |
| 840.1.055.2B | 14/15 | 2 | 840.1.082.2B | 14/15 | 2 | 850.4.047.1A | 034 | 18 | 852.1.104.2D | 006 | 11 | 852.1.221.1A | 026a | 3 |
| 840.1.056.2B | 14/15 | 2 | 840.1.083.2B | 14/15 | 2 | 850.4.052.1A | 027a | 10 | 852.1.104.2E | 006 | 11 | 852.1.222.1A | 026 | 6 |
| 840.1.057.2B | 14/15 | 2 | 840.1.084.2B | 14/15 | 2 | 850.4.055.1A | 018 | 1 | 852.1.104.2F | 006 | 11 | 852.1.232.1A | 027 | 16 |
| 840.1.058.2B | 14/15 | 2 | 840.1.085.2B | 14/15 | 2 | 850.4.055.1A | 019 | 5 | 852.1.104.2G | 006 | 11 | 852.1.250.1A | 023 | 23 |


CATALOGUE No: 915.1.289.1B
ISSUED: 04 - 09

CATALOGUE No: 915.1.289.1B
ISSUED: 04 - 09

Index


| CODE No. | Drwg. | POS. N. | CODE No. | Drwg. | POS. N. | CODE No. | Drwg. | POS. N. | CODE No. | Drwg. | POS. N. | CODE No. | Drwg. | POS. N. |
|---|---|---|---|---|---|---|---|---|---|---|---|---|---|---|
| 852.1.250.1A | 024 | 33 | 856.1.042.1A | 034 | 27 | 875.1.128.1A | 028 | 14 | 886.1.095.1A | 011 | 22 | 88713.0957 | 001b | 12 |
| 852.4.013.1A | 017 | 16 | 856.1.062.2A | 008 | 19 | 875.1.146.1A | 010 | 24 | 886.4.033.1A | 009 | 4 | 88713.0958 | 001b | 3 |
| 852.4.021.1A | 029 | 10 | 856.1.064.2A | 010 | 15 | 875.1.146.1A | 010a | 19 | 886.4.033.1A | 010 | 32 | 88713.1010 | 001a | 2 |
| 852.4.173.1A | 027a | 25 | 856.1.071.1A | 012 | 9 | 876.1.102.2B | 029 | 2 | 886.4.034.1A | 009 | 18 | 88713.1058 | 001b | 7 |
| 852.5.009.1A | 018 | 9 | 856.1.074.2A | 013 | 4 | 877.1.138.1A | 023 | 15 | 886.4.037.1A | 009 | 6 | 88713.1062 | 001b | 9 |
| 852.5.023.1A | 010a | 16 | 856.1.075.1A | 012 | 17 | 877.1.138.1A | 024 | 17 | 886.4.043.1A | 004 | 27 | 88713.1068 | 001b | 2 |
| 852.5.023.1A | 011 | 30 | 860.1.004.1A | 010 | 23 | 877.1.139.1A | 025 | 21 | 886.4.064.1A | 027a | 11 | 88713.1071 | 001b | 10 |
| 852.5.023.1A | 015 | 20 | 860.1.004.1A | 011 | 21 | 877.2.006.1B | 029 | 11 | 886.4.089.1A | 017 | 17 | 88713.1072 | 001b | 1 |
| 852.5.023.1A | 035 | 13 | 860.1.005.1A | 010 | 26 | 881.1.012.1A | 002 | 32 | 886.4.103.1A | 031 | 10 | 88713.1074 | 001b | 4 |
| 852.5.024.1A | 002 | 5 | 860.5.006.1A | 014 | 24 | 881.1.023.1A | 030 | 19 | 886.4.116.1A | 022 | 27 | 88713.1096 | 001b | 14 |
| 852.5.024.1A | 005 | 16 | 860.5.006.1A | 015 | 24 | 881.1.034.1A | 012 | 18 | 886.4.116.1A | 025 | 11 | 88713.1515 | 001b | 6 |
| 852.5.024.1A | 011 | 32 | 860.5.017.1A | 021 | 27 | 881.1.054.1A | 026a | 7 | 886.4.118.1A | 004 | 26 | 88713.1749 | 001a | 13 |
| 852.5.024.1A | 019 | 10 | 866.1.098.1A | 018 | 24 | 881.1.058.1A | 016 | 12 | 886.4.118.1A | 010 | 13 | 88713.1805 | 001a | 3 |
| 852.5.024.1A | 023 | 17 | 866.1.104.1A | 033 | 2 | 881.1.058.1A | 019 | 41 | 886.4.124.1A | 026a | 16 | 88713.1806 | 001a | 6 |
| 852.5.024.1A | 024 | 4 | 866.1.107.1A | 033 | 8 | 881.2.001.1A | 004 | 19 | 886.4.132.1A | 005 | 12 | 88713.1821 | 001a | 9 |
| 852.5.024.1A | 025 | 23 | 866.1.108.2A | 033 | 35 | 882.1.003.1A | 008 | 11 | 886.4.132.1A | 009 | 22 | 88713.1832 | 001 | 9 |
| 852.5.026.1A | 011 | 25 | 866.1.116.1A | 021 | 45 | 882.1.006.1A | 002 | 16 | 886.4.132.1A | 010 | 8 | 88713.1886 | 001 | 13 |
| 852.5.026.1B | 014 | 11 | 866.1.118.1A | 033 | 3 | 884.4.025.1A | 033 | 32 | 886.5.013.1A | 010 | 3 | 88713.1920 | 001a | 8 |
| 852.5.026.1B | 015 | 11 | 866.4.006.1A | 032 | 18 | 884.4.051.1A | 026a | 18 | 886.5.013.1A | 010a | 18 | 88713.1980 | 001a | 16 |
| 852.5.027.1A | 030 | 20 | 872.1.053.1A | 018a | 8 | 884.5.003.1A | 022 | 10 | 886.5.014.1A | 021 | 40 | 88713.2011 | 001a | 7 |
| 852.5.040.1A | 021 | 36 | 872.1.054.2A | 028a | 7 | 884.5.003.1A | 027 | 14 | 886.5.048.1A | 032a | 6 | 88713.2060 | 001a | 11 |
| 852.5.042.1A | 010 | 5 | 872.1.058.1A | 021 | 21 | 884.5.011.1A | 011 | 8 | 886.5.051.1A | 013 | 1 | 88713.2092 | 001 | 6 |
| 853.1.003.1A | 010 | 30 | 872.1.062.1A | 018a | 18 | 884.5.013.1A | 005 | 18 | 88700.5665 | 001 | 10 | 88713.2102 | 001a | 4 |
| 853.1.003.1A | 012 | 2 | 872.1.063.1A | 018a | 4 | 884.5.034.1A | 002 | 22 | 88700.5749 | 001 | 14 | 88713.2103 | 001 | 7 |
| 853.5.010.1A | 018 | 20 | 872.4.060.1A | 031 | 20 | 884.5.039.1A | 009 | 25 | 88713.0123 | 001 | 4 | 88713.2133 | 001 | 12 |
| 856.1.001.1A | 003 | 6 | 873.1.005.1A | 013 | 13 | 886.1.013.1A | 032a | 1 | 88713.0869 | 001 | 15 | 88713.2409 | 001b | 15 |
| 856.1.031.1A | 003 | 16 | 875.1.065.1A | 001d | 3 | 886.1.024.1A | 010 | 27 | 88713.0870 | 001 | 16 | 88713.2442 | 001 | 2 |




CATALOGUE No: 915.1.289.1B
ISSUED: 04 - 09

Index


| CODE No. | Drwg. | POS. N. | CODE No. | Drwg. | POS. N. | CODE No. | Drwg. | POS. N. | CODE No. | Drwg. | POS. N. | CODE No. | Drwg. | POS. N. |
|---|---|---|---|---|---|---|---|---|---|---|---|---|---|---|
| 88713.2562 | 001b | 13 | 893.4.005.1A | 025 | 27 | 94247.0014 | 011 | 12 | | | | | | |
| 88713.2669 | 001 | 17 | 893.4.007.1A | 024 | 14 | 97900.0002 | 001c | 2 | | | | | | |
| 88713.2676 | 001 | 1 | 893.4.008.1A | 023 | 11 | 97900.0003 | 001d | 23 | | | | | | |
| 88713.2827 | 001 | 11 | 894.1.020.1A | 009 | 23 | 97900.0215 | 001c | 1 | | | | | | |
| 88713.2832 | 001a | 1 | 895.2.020.1A | 032 | 8 | 97900.0216 | 001c | 5 | | | | | | |
| 88713.2834 | 001a | 17 | 8A00.67610 | 031 | 12 | 97900.0217 | 001c | 15 | | | | | | |
| 88713.2861 | 001a | 15 | 913.7.141.1G | 033 | 29 | 97900.0218 | 001d | 18 | | | | | | |
| 88713.2870 | 001a | 10 | 930.1.004.1A | 021 | 5 | 97900.0219 | 001c | 10 | | | | | | |
| 88713.2874 | 001 | 8 | 930.4.002.2A | 003 | 30 | 97900.0220 | 001d | 21 | | | | | | |
| 88713.2877 | 001a | 18 | 930.4.011.1A | 028 | 6 | 97900.0221 | 001d | 22 | | | | | | |
| 88713.2878 | 001 | 5 | 930.4.021.1A | 005 | 20 | 97900.0222 | 001c | 9 | | | | | | |
| 88713.2906 | 001 | 18 | 930.4.022.1A | 010 | 20 | 97900.0223 | 001c | 11 | | | | | | |
| 88713.2951 | 001b | 11 | 930.4.034.1A | 005 | 6 | 97900.0224 | 001c | 6 | | | | | | |
| 88713.3211 | 001b | 5 | 930.4.035.1A | 004 | 16 | 97900.0225 | 001c | 8 | | | | | | |
| 88713.3220 | 001b | 16 | 930.4.052.1A | 026 | 18 | 97900.0226 | 001c | 12 | | | | | | |
| 88765.1126C | 001d | 24 | 930.4.123.1A | 010a | 8 | 97900.0227 | 001d | 7 | | | | | | |
| 88765.1126T | 001d | 16 | 930.5.005.1A | 011 | 26 | 97900.0228 | 001d | 12 | | | | | | |
| 88765.1126V | 001c | 14 | 930.5.006.2B | 011 | 28 | 97900.0229 | 001c | 13 | | | | | | |
| 88765.1188 | 001a | 12 | 930.5.007.1A | 013 | 17 | 97900.0230 | 001d | 20 | | | | | | |
| 88765.1298 | 001 | 3 | 930.5.012.1A | 028a | 5 | 97900.0231 | 001d | 17 | | | | | | |
| 88765.1371 | 001c | 3 | 934.1.006.1A | 031 | 8 | 97900.0232 | 001c | 7 | | | | | | |
| 88765.1374 | 001c | 4 | 934.1.010.1A | 029 | 14 | | | | | | | | | |
| 88765.1518 | 001a | 5 | 934.1.012.1A | 031 | 28 | | | | | | | | | |
| 88765.1524 | 001a | 14 | 93783.1524 | 011 | 18 | | | | | | | | | |
| 893.1.007.1A | 031 | 2 | 93823.2018 | 004 | 30 | | | | | | | | | |
| 893.2.006.2A | 010 | 7 | 93823.3075 | 005 | 17 | | | | | | | | | |
| 893.2.013.1A | 005 | 7 | 94247.0014 | 010a | 3 | | | | | | | | | |




CATALOGUE No: 915.1.289.1B
ISSUED: 04 - 09